Price List

Valid from 1st April 2026

Europe

Terms & Conditions

Partner Terms and Commercial Conditions

- Commercial discounts and partner conditions are defined in individual Hem Partner Terms.
- Please contact your Hem representative for applicable partner terms and pricing conditions.

Payment Terms

- Default payment terms are Cash in Advance (CIA).
- Alternative payment terms may be approved on request and are subject to credit review and written agreement.

Availability & Lead Times

- Hem maintains EU inventory of selected products and finishes, allowing for quicker fulfillment where available.
- Product availability and lead times are confirmed upon quotation. Please reference hem.com for real-time inventory availability, or reach out to orders@hem.com.

Incoterms & Delivery

- Deliveries are made Delivered At Place (DAP), unless otherwise agreed in writing, meaning the buyer is responsible for unloading and any applicable local VAT.
- EXW (Ex Works) is available on request and subject to approval.

Express freight is available on request and charged at cost.

Shipping and Duties

- Flat freight: €149 per order
- Flat parcel: €49 per order
- Free freight for orders above €2,000 net

Custom Program

- Graded-In Textile and Custom products are produced on demand.
- Applicable lead times are confirmed upon quotation.

Order Changes and Cancellations

- Orders may be cancelled or amended within 48 hours of written order confirmation.
- After this period, orders are binding and cannot be cancelled unless approved by Hem.

Delivery Delays and Storage

- If delivery is delayed at the customer's request, Hem may store goods for a limited grace period.
- Extended delays may result in storage fees, additional handling costs, or delivery at the customer's cost.
- Open-ended delivery holds should be avoided and require Hem's approval.
- For EXW orders, goods must be collected within a commercially reasonable period after Hem's ready-for-pickup notification.
- Storage fees and additional handling or delivery costs may apply for delayed pickup.

Quotes and Pricing

- Quotes are valid for 30 days unless otherwise stated.
- Hem reserves the right to adjust prices due to currency fluctuations, material cost changes, or supplier increases.

Digital Tools and Samples

- The Hem Pro portal can be used to:
  - Place orders and create quotes
  - View stock levels
  - Access CAD and Revit files
  - Order material samples

Legal Disclaimer

- Hem reserves the right to alter prices without prior notice and correct any errors in price lists or documentation. For full terms and conditions, please reference https://pro.hem.com/en-eu/terms-and-conditions

General Questions: info@hem.com
Send in orders: orders@hem.com

Imaginative Design INT AB
Högbergsgatan 27, 11620 Stockholm
Phone: + 46 (0)8 408 067 40

To complement our existing curated collection Hem offers a *Graded-in program* which makes it easy for partners, designers and architects to satisfy individual needs and preferences.

Please reach out to orders@hem.com for any questions or requests.

Samples

For textile samples outside of Hem's curated collection, please reach out to their local representatives:

www.kvadrat.dk
www.butefabricsltd.com
www.rohi.com
www.gu.no
www.chioccarello.it
www.maharam.com
www.camirafabrics.com
www.dedar.com

Chairs

Stools

From the ultimate easy chair to the perfect bistro chair, we've engineered a collection of seating for every situation and every interior, making sure you are always supported in comfort and style.

All Wood Stool Rocket & Bobbin

Design by Karoline Fesser

Like a good friend, the All Wood Stool is easy to be around. This functional piece of occasional furniture can be a side table, a seat, or a platform on which to display your favorite things. Adjust its height whenever you like with a simple turn of its screw mechanism. Designer Karoline Fesser nods to midcentury icons such as the Eames Time Life stool as well as functional workshop furniture like sculptors' tables. As its name implies, this piece is made from solid ash or walnut wood, CNC cut, and lacquered. Choose from two shapes, Rocket or Bobbin.

Product name	Finish	SKU
All Wood Stool Rocket	Walnut	14148
	Ash	14149
All Wood Stool Bobbin	Walnut	14150
	Ash	14151

Material
Solid Walnut
Juglans Nigra
Clear Lacquered

Solid Ash
Fraxinus Excelsior
Clear Lacquered

Wood is a natural material. The color might vary from piece to piece

Country of origin
Poland

Tests & certifications
EN 16139:2013 – L1: General Use – Furniture – Strength, durability and safety – Requirements for non-domestic seating

3D model
3D files of all products are available on the product pages on hem.com

Always in stock
We keep all our products in stock and ready to ship from our warehouses in the US and EU

Walnut
Solid Walnut

Ash
Solid Ash

Samples
We supply samples of all our material finishes, order them directly from hem.com/samples

All Wood Stool Rocket

Top view

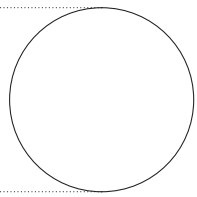

Front view

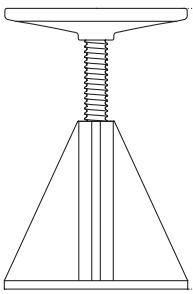

All Wood Stool Bobbin

Top view

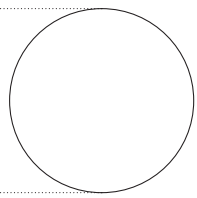

Front view

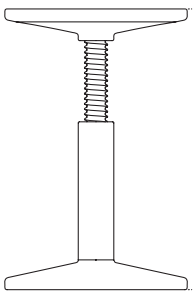

Bullnose Chair

Design by Marco Campardo

Dining just got more interesting. Gently rounded beech wood sections lend the Bullnose Chair, by Marco Campardo, an unexpectedly distinct quality: robust but soft, imposing yet inviting. It has a read-me-like-a-book construction of wooden parts, with each element carefully calibrated for strength and comfort. Deftly handled angles and subtly placed curves improve sitting ergonomics. As well as being the perfect perch for endless dinners, the Bullnose Chair brings visual interest to the table. Pair it with an understated surface for an interior pick-me-up, line them up banquet-style for architectural effect, or carefully position just one or two for small space impact. The Bullnose Chair is available in different shades of stained beech.

Product name	Finish	SKU
Bullnose Chair	Natural Beech	30735
	Yellow Stained Beech	31304
	Black Stained Beech	31303

Material
Beech
Fagus Sylvatica
Water-based lacquer

Country of origin
Poland

Tests & certifications
ANSI/BIFMA X5.4-2020 American National Standard for Office and Institutional Furnishings - Public and Lounge Seating

Natural
Beech

Yellow Stained
Beech

Black Stained
Beech

Bullnose Chair

Top view

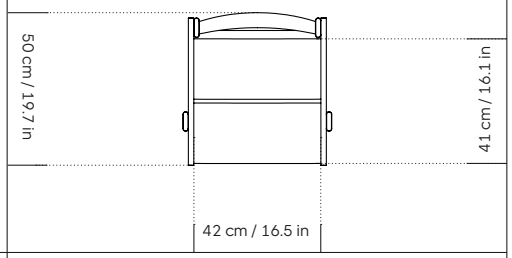

Bullnose Chair

Front view

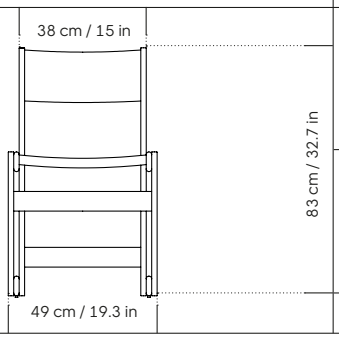

Bullnose Chair

Side view

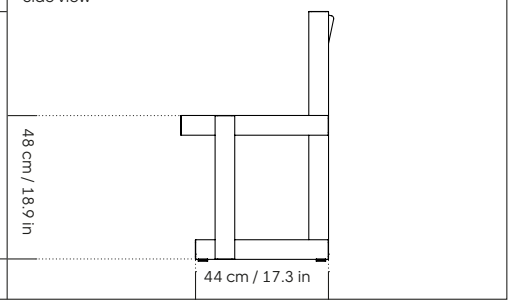

Bullnose Lounge Chair

Design by Marco Campardo

Low-slung, deeply inclined, gently rounded, the Bullnose Lounge Chair demands you take a break. This solid wood chair shares all the same qualities as its dining sibling, but is altogether more, well, relaxed. The bullnose-shaped wooden sections that characterize this seating series by Marco Campardo are as distinct and impactful as ever, lending the chair a unique profile and making it extremely robust and sturdy. A deep and wide seat makes for comfortable lounging. Choose the Bullnose Lounge Chair for extensive loafing, long-play days and stylish lounge sessions. The Bullnose Chair is available in different shades of stained beech.

Product name	Finish	SKU
Bullnose Lounge Chair	Natural Beech	30736
	Yellow Stained Beech	31306
	Black Stained Beech	31305

Material
Beech
Fagus Sylvatica
Water-based lacquer

Country of origin
Poland

Tests & certifications
ANSI/BIFMA X5.4-2020 American National Standard for Office and Institutional Furnishings - Public and Lounge Seating

Natural
Beech

Yellow Stained
Beech

Black Stained
Beech

Bullnose Lounge Chair

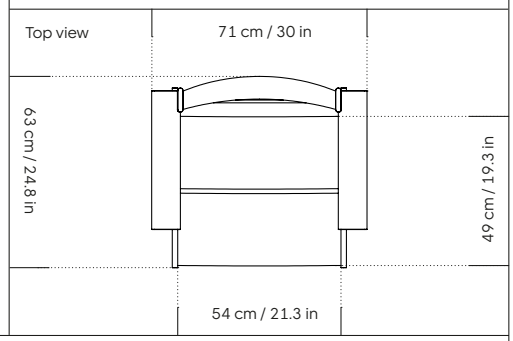

Bullnose Lounge Chair

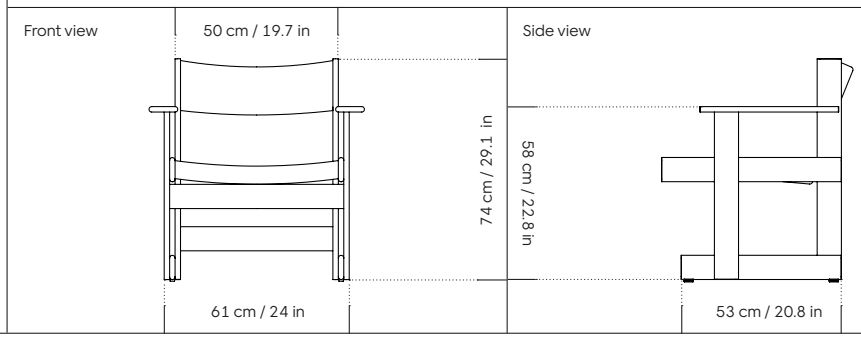

Bullnose Chair Seat Pad

Design by Marco Campardo

Product name	Finish	SKU
Bullnose Chair Seat Pad	Elmosoft 54035 Tiree 2223	30823 30822

Upholstery
Elmosoft Leather
by Elmo (Sweden)
Scandinavian Grain Leather, Semi-aniline
Lightfastness 6

Tiree
by Bute Fabrics (Scotland)
92% Pure New Wool, 8% Nylon
50,000 Martindale
Pilling 3-4
Lightfastness 5-8
Flame resistance EN 1021: Part 1 & 2,
BS 5852: Part 1 & 2 (Crib 5), US Cal. TB 117-2013

Inside Material
PU Foam

Country of origin
Poland

Elmosoft 54035

Tiree 2223

Bullnose Chair Seat Pad

Top view

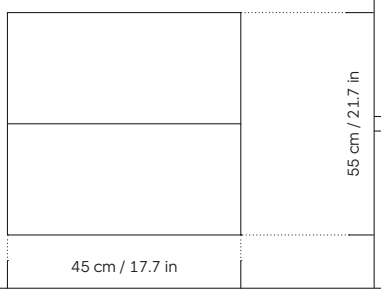

Side view

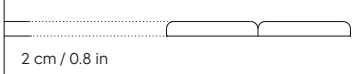

Bullnose Lounge Chair Seat Pad

Design by Marco Campardo

Product name	Finish	SKU
Bullnose Lounge Chair Seat Pad	Elmosoft 54035	30826
	Tiree 2223	30825
	Sheepskin Taupe Z579/03	30824

Upholstery
Elmosoft Leather
by Elmo (Sweden)
Scandinavian Grain Leather, Semi-aniline
Lightfastness 6

Tiree
by Bute Fabrics (Scotland)
92% Pure New Wool, 8% Nylon
50,000 Martindale
Pilling 3-4
Lightfastness 5-8
Flame resistance EN 1021: Part 1 & 2,
BS 5852: Part 1 & 2 (Crib 5), US Cal. TB 117-2013

Sheepskin
by Zinc Textile (Australia)
100% Sheepskin
90,000 Martindale
Flame resistance EN1021 Part 1 Upholstery, BS 5852 PART 1 IGN 0 Cigarette, BS 5852 PART 1 IGN 1 Match, BS 5852 PART 2 IGN 5 Crib Conctract Upholstery, NFPA260, CAL117

Inside Material
PU Foam

Country of origin
Poland

Elmosoft 54035

Tiree 2223

Sheepskin Taupe Z579/03

Bullnose Lounge Chair Seat Pad

Top view

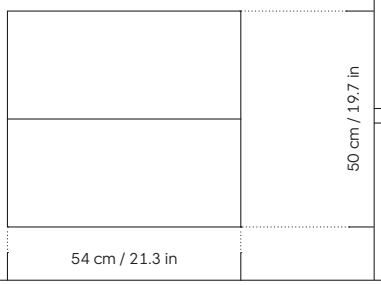

Side view

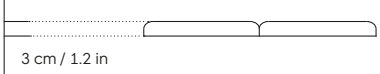

Chop Chair

Design by Philippe Malouin

The Chop Chair by Philippe Malouin is an evergreen design conceived for use in a range of public and private outdoor spaces. Beautifully proportioned, with subtle curvatures, it is intentionally simple, in both construction and style. Chop reimagines a classic slatted-chair archetype to create a silhouette that is immediately recognizable, yet pleasingly unknown. The idea for the design was influenced by Malouin's work in the art world, where he often utilizes hand-led industrial techniques to develop striking forms that accentuate the object's materiality. The Chop collection is cut, bent and welded from durable stainless steel, and is available in a raw, sandblasted or powder-coated colored finish. A design for all seasons, Chop is correctly weighted to resist wind, while still being light enough to move around and stack with ease.

Color variants material
Stainless Steel
Powder Coated

Laminate / Stainless variant material
Stainless Steel

Product weight
8 kg / 17.6 lb

Country of origin
Poland

Tests & certifications
EN 16139:2013 – L2: Extreme use - Furniture - Strength durability and safety - Requirements for non-domestic seating

ANSI/BIFMA X5.1-2017 American National Standard For Office Furnishings – General Purpose Office Chairs

3D model
3D files of all products are available on the product pages on hem.com

Beige (RAL 1001)
Powder Coated Steel

Black Green (RAL 6012)
Powder Coated Steel

Grey White (RAL 9002)
Powder Coated Steel

Ultramarine Blue (RAL 5002)
Powder Coated Steel

Stainless Steel
Sandblasted

MTO
Please refer to the price list or reach out to your local representative for our made-to-order options

Chop Chair

Front view

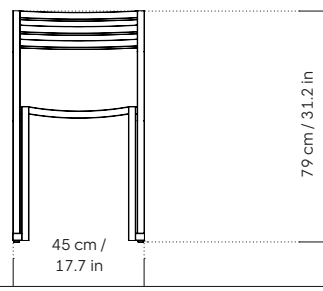

Side view

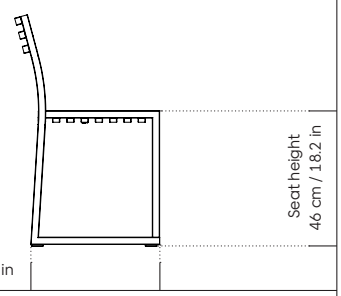

Stackability

Side view

Recommended
max. stacking
6 pcs

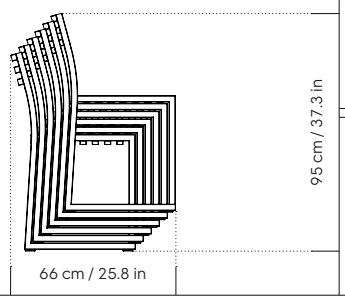

Forward stacking

Side view

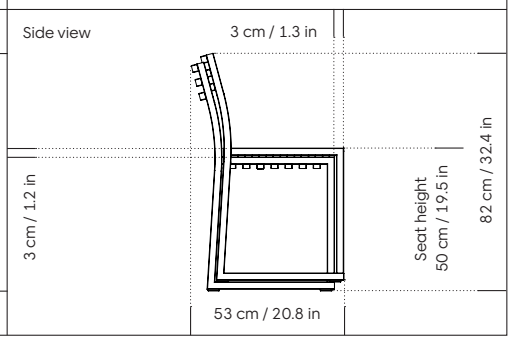

Chop Bar Chair

Design by Philippe Malouin

The Chop Chair by Philippe Malouin is an evergreen design conceived for use in a range of public and private outdoor spaces. Beautifully proportioned, with subtle curvatures, it is intentionally simple, in both construction and style. Chop reimagines a classic slatted-chair archetype to create a silhouette that is immediately recognizable, yet pleasingly unknown. The idea for the design was influenced by Malouin's work in the art world, where he often utilizes hand-led industrial techniques to develop striking forms that accentuate the object's materiality. The Chop collection is cut, bent and welded from durable stainless steel, and is available in a raw, sandblasted or powder-coated colored finish. A design for all seasons, Chop is correctly weighted to resist wind, while still being light enough to move around and stack with ease.

Color variants material
Stainless Steel
Powder Coated

Laminate / Stainless variant material
Stainless Steel

Product weight
8 kg / 17.6 lb

Country of origin
Poland

Tests & certifications
EN 16139:2013 – L2: Extreme use - Furniture - Strength durability and safety - Requirements for non-domestic seating

ANSI/BIFMA X5.1-2017 American National Standard For Office Furnishings – General Purpose Office Chairs

3D model
3D files of all products are available on the product pages on hem.com

Black Green (RAL 6012)
Powder Coated Steel

Stainless Steel
Sandblasted

MTO
Please refer to the price list or reach out to your local representative for our made-to-order options

Chop Bar Chair

Front view

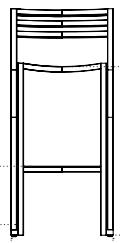

Side view

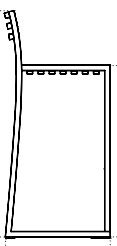

Chop Counter Chair

Design by Philippe Malouin

The Chop Chair by Philippe Malouin is an evergreen design conceived for use in a range of public and private outdoor spaces. Beautifully proportioned, with subtle curvatures, it is intentionally simple, in both construction and style. Chop reimagines a classic slatted-chair archetype to create a silhouette that is immediately recognizable, yet pleasingly unknown. The idea for the design was influenced by Malouin's work in the art world, where he often utilizes hand-led industrial techniques to develop striking forms that accentuate the object's materiality. The Chop collection is cut, bent and welded from durable stainless steel, and is available in a raw, sandblasted or powder-coated colored finish. A design for all seasons, Chop is correctly weighted to resist wind, while still being light enough to move around and stack with ease.

Color variants material
Stainless Steel
Powder Coated

Laminate / Stainless variant material
Stainless Steel

Product weight
8 kg / 17.6 lb

Country of origin
Poland

Tests & certifications
EN 16139:2013 – L2: Extreme use - Furniture - Strength durability and safety - Requirements for non-domestic seating

ANSI/BIFMA X5.1-2017 American National Standard For Office Furnishings – General Purpose Office Chairs

3D model
3D files of all products are available on the product pages on hem.com

Black Green (RAL 6012)
Powder Coated Steel

Stainless Steel
Sandblasted

MTO
Please refer to the price list or reach out to your local representative for our made-to-order options

Chop Counter Chair

Front view

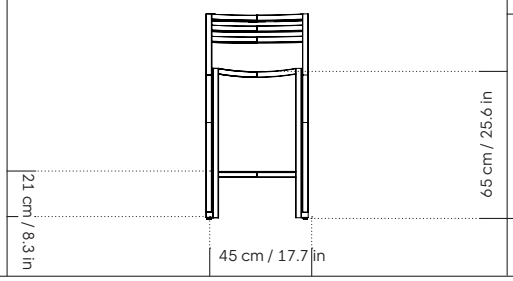

Side view

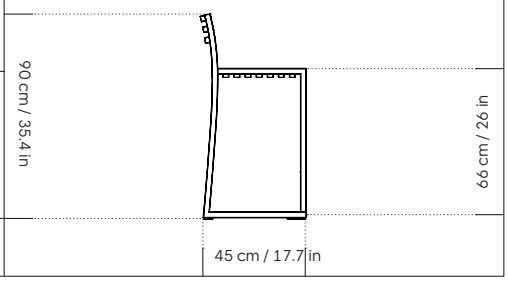

Chop Seat Pad

Design by Philippe Malouin

Made from durable EVA foam with a velour backing, the Chop Seat Pad offers unparalleled comfort and support for all types of Chop Chairs, while the water-repellent fabric ensures resilience against the elements. Designed to perfectly mold to the Chop Chair's seat, installation is a breeze, transforming your chair into a haven of relaxation in minutes. Upgrade your outdoor experience with the Chop Seat Pad – a stylish, comfortable, and hassle-free solution for enhancing your Chop Chairs.

Product name	Finish	SKU
Chop Seat Pad	Brown	31420

Color variants material
Sunbrella Solids
EVA Foam

Country of origin
Sweden

Brown
Sunbrella Solids

MTO
Reach out to your local representative for the full selection of made-to-order options.

Chop Seat Pad

Top view

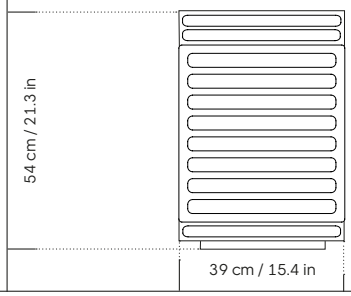

Side view

Experiment Lounge Chair

Design by Yrjö Kukkapuro

Timeless, bold, and as compelling today as the day it was created, the Experiment Chair was designed by celebrated Finnish designer Yrjö Kukkapuro in 1982. Its expressive, innovative design was realized during a period of intense productivity by Kukkapuro, then a leading figure of Functionalism. The chair is an icon of eighties design. It demonstrates all the ergonomic qualities and extraordinary structural detail Kukkapuro is famed for. And, importantly, it embodies a fearless postmodern aesthetic that hasn't lost any of its impact. In the Experiment Chair, Kukkapuro sought to add art to Functionalism, to satisfy romantic tastes alongside meeting essential needs. The result is startling, authentic, a hero of twentieth-century design. It has been Hem's privilege to work alongside Yrjö to reintroduce the Experiment Chair to a new generation. The updated Experiment Chair is faithful to the original, featuring the same decorative armrests; red symbolizing fire, green representing trees, and blue denoting waves on a lake. New upholstery options are available, and the chair features subtle resizing tailored to contemporary needs.

Material
Elmosoft Leather
by Elmo (Sweden)
Scandinavian Grain Leather, Semi-aniline
Lightfastness 6

Steelcut 3
by Kvadrat (UK)
90% New Wool, 10% Nylon
100,000 Martindale
Pilling 3-4, Lightfastness 6
EN 1021: Part 1 & 2, US Cal. TB 117-2013, BS 5852: Part 1
EU Ecolabel, Greenguard Gold

Leg Material
Steel
Chrome
Birch Plywood
Solid Beech
Water-based lacquer

Inside Material
PU Foam
Birch Plywood Structure

Country of origin
Poland

Tests & certifications
FSC mix, VOC Certified: M7.1/X7.1-2011 R2021;
SCS Indoor Advantage Gold.
EN 16139:2013 – L1: General Use – Furniture – Strength, durability and safety – Requirements for non-domestic seating

Black Leather
Elmosoft Leather (99999)

Light Beige
Steelcut 3 (0240)

Black
Steelcut 3 (0190)

Green (Pantone 361 C)
Lacquered Wood

Blue (Pantone 7697 C)
Lacquered Wood

Black (Pantone Black 6 C)
Lacquered Wood

Red (Pantone 200 C)
Lacquered Wood

Chrome
Chrome Plated Steel

Experiment Lounge Chair 501

Front view

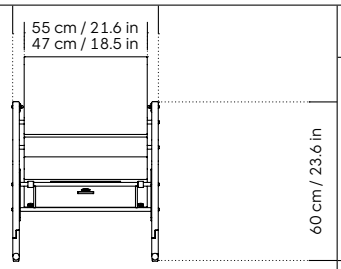

Side view

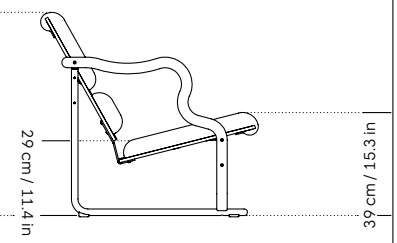

Experiment Lounge Chair 502

Front view

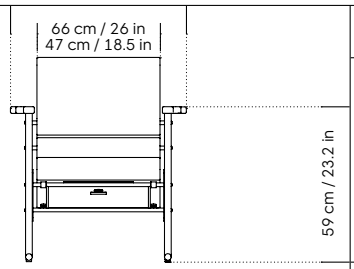

Side view

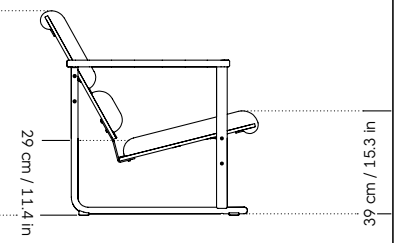

Experiment Lounge Chair 503

Front view

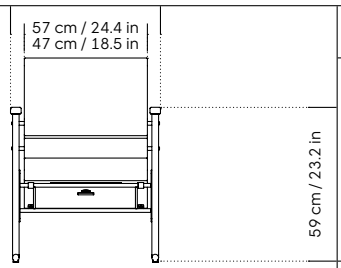

Side view

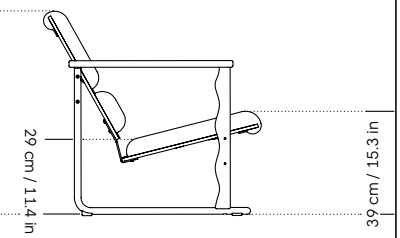

Experiment Lounge Chair 501

Top view

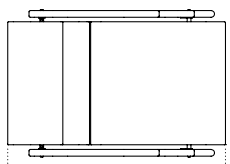

Experiment Lounge Chair 502

Top view

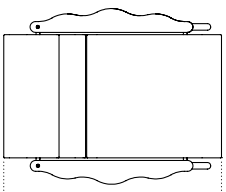

Experiment Lounge Chair 503

Top view

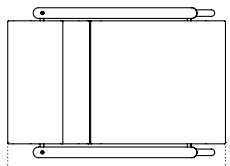

Great Sofa - Product Details

Design by Philippe Malouin

The Great Sofa lives up to its monumental name. Great in scale; more landscape than furniture, an expansive archipelago of soft upholstery upon which to retreat. Great in looks; the sofa broadcasts its relaxez-vous informality with loose-fit covers that adapt to your body, crumple and cosset - nothing is uptight or rigid about Great Sofa. Great Sofa excels in concept too; easy-to-fit-and-remove covers aid effortless cleaning and offer longevity. No tools are needed for assembly. Plus, our modular system facilitates endless configurations for laidback, feet-up luxury. Corners, islands, conversation pits welcome.

Upholstery
Cifrado
by Kvadrat/Sahco (Denmark)
42% recycled polyester, 27% viscose, 24% recycled cotton, 7% linen
30,000 Martindale
Pilling 5
Lightfastness 5-6
Flame resistance EN 1021: Part 1 & 2, US Cal. TB 117-2013, IMO 2010 FTP Code Part 8

Safire
by Kvadrat/Sahco (Denmark)
43% viscose, 17% polyacrylic, 15% new wool, 9% cotton, 8% polyester, 8% linen
40,000 Martindale
Pilling 3
Lightfastness 5-6
Flame resistance BS 5852: Part 1, EN 1021: Part 1 & 2, US Cal. TB 117-2013, IMO 2010 FTP Code Part 8

Autumn
by Kvadrat (Denmark)
100% Recycled Polyester
50,000 Martindale
Pilling 4-5
Lightfastness 6-7
Flame resistance ASTM E 84 Adhered, ASTM E84 Class A Unadhered, EN 1021: Part 1 & 2, IMO 2010 FTP Code Part 8, US Cal. TB 117-2013

Leg material
Birch wood
Painted

Inside material
PU foam
Wooden structure

Country of origin
Lithuania

Tests & certifications
EN 16139:2013 – L2: Extreme use – Furniture Strength, durability and safety – Requirements for non-domestic

Product accessory
Great Cushion

3D model
3D files of all products are available on the product pages on hem.com

Cifrado
0381

Cifrado
0111

Cifrado
0901

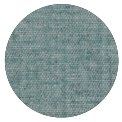
Cifrado
0741

Safire
0003

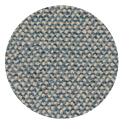
Safire
0012

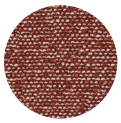
Safire
0013

Safire
0014

Safire
0007

Autumn
0131

Autumn
0221

Autumn
0331

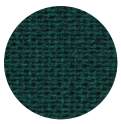
Autumn
0971

Autumn
0361

Samples
We supply samples of our material finishes. You can order them directly from hem.com/samples

Graded-in Textile and Made-To-Order
Reach out to your local representative for the full selection of made-to-order options.

Great Sofa Ottoman

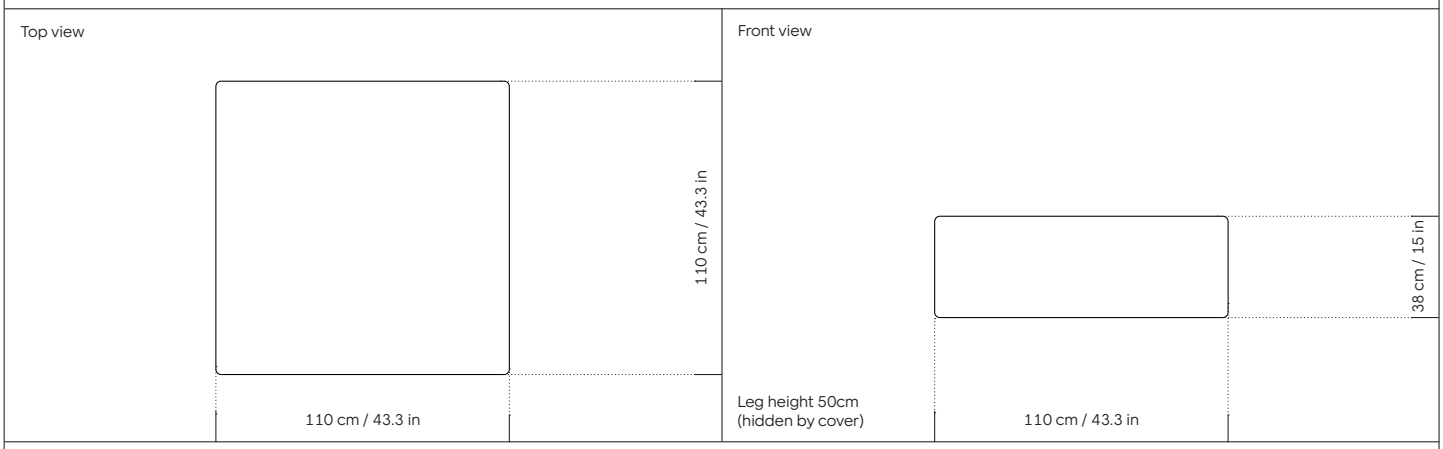

Great Sofa Extension Module

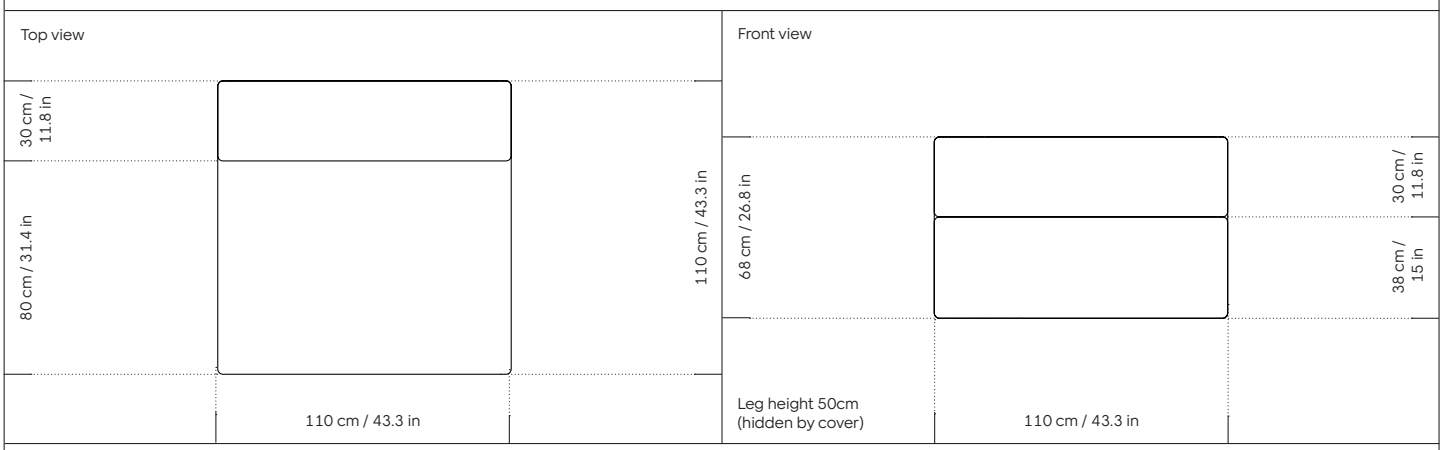

Great Sofa Extension Module Narrow

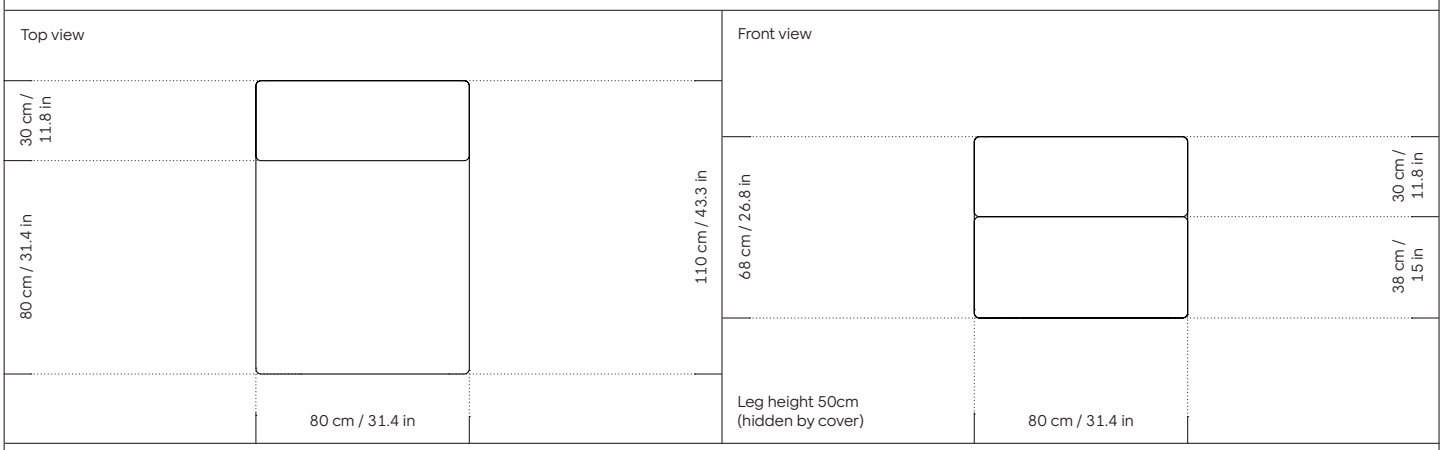

Great Sofa Corner Module

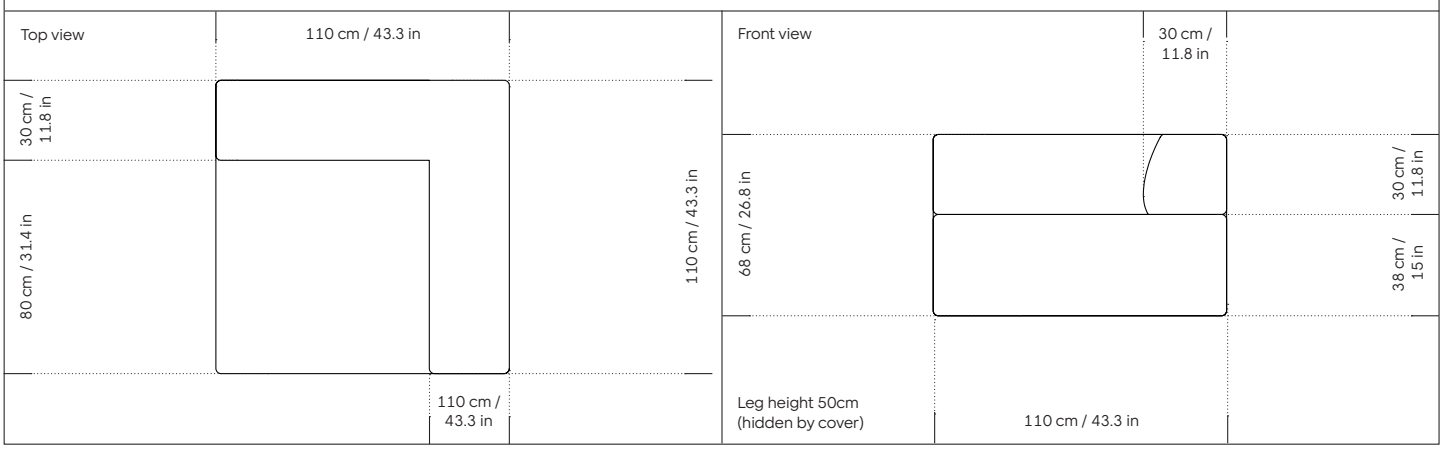

Great Sofa - Variant Overview

This is a modular product that can be configured freely to fit your needs. All variants consist of either the Great Sofa Corner Module, Great Sofa Extension Module, Great Sofa Extension Module Narrow or Great Sofa Ottoman.
For custom configurations reach out to info@hem.com for assistance.

Great Sofa Ottoman

Great Sofa Extension Module

Great Sofa Extension Module Narrow

Great Sofa Corner Module

Great 2-seater Sofa

Great 3-seater Sofa

Great 3-seater Sofa Narrow

Great 3-seater Sofa Corner Right

Great 3-seater Sofa Corner Left

Great 3-seater Sofa Chaise Right

Great 3-seater Sofa Chaise Left

Great 3-seater Sofa Narrow Corner Right

Great 3-seater Sofa Narrow Corner Left

Great 3-Seater Sofa Narrow Chaise Right

Great 3-seater Sofa Narrow Chaise Left

Hai Lounge Chair

Design by Luca Nichetto

The Hai Chair does everything a classic armchair does and more. Luca Nichetto's design is strong—very strong—ergonomic, and handsome, but smart about it. A lightweight metal skeleton is covered in molded foam and soft, inviting textile for maximum comfort. Although sleek and contemporary, the wide arms and high back embrace the sitter in a way that inspires total, classic relaxation. The Hai Chair's sleek looks can be admired from every angle, even from behind, making this an armchair that nobody should push into a corner.

Upholstery
Uniform Mélange
by Febrik x Kvadrat (Netherlands)
68% New wool, 22% Nylon, 10% Polyester
100,000 Martindale
Pilling 4, Lightfastness 6
Flame resistance EN 1021: Part 1 & 2, BS 5852: Part 1, US Cal. TB 117

Bute Storr
by Bute Fabrics (Scotland)
97 % Pure New Wool, 3% Nylon
65000 Martindale
Pilling 4-5, Lightfastness 5
Flame resistance IMO FTP Code(2010) Annex 1, Part 8, BS 5852: Part 1 & 2 (Crib 5), US Cal. TB 121

Steelcut 3
by Kvadrat (UK)
90% New Wool, 10% Nylon
100,000 Martindale
Pilling 3-4, Lightfastness 6
EN 1021: Part 1 & 2, US Cal. TB 117-2013, BS 5852: Part 1

Cura
by Gabriel (Denmark)
98% Recycled Polyester, 2% Polyester
100,000 Martindale
Pilling 4-5; Lightfastness 5-8
Flame resistance EN 1021: Part 1 & 2, US Cal. TB 117-2013

Sera
by Rohi (Germany)
94% Virgin Wool, 6% Polyamide
122,000 Martindale
Pilling 4-5
Lightfastness 5-8
Flame resistance EN 1021: Part 1 & 2, BS 5852: Part 1 & 2 (Crib 5), US Cal. TB 117

Leg material
Powder Coated Steel
Brushed Stainless Steel

Inside material
PU foam
Steel structure

Country of origin
Lithuania

Tests & certifications
EN 16139:2013 – L2: Extreme use – Furniture – Strength, durability and safety – Requirements for non-domestic seating

Product accessory
Hai Ottoman

Samples
We supply samples of our material finishes. You can order them directly from hem.com/samples

Graded-in Textile and Made-To-Order
Please refer to the price list or reach out to your local representative for our made-to-order options

Ink
Uniform Mélange (0793)

Pink
Uniform Mélange (0623)

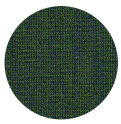
Peacock
Uniform Mélange (0983)

Liquorice
Uniform Mélange (0353)

Shell
Uniform Mélange (0103)

Charcoal
Uniform Mélange (0193)

Eggshell
Bute Storr Eggshell

Pebble
Bute Storr Pebble

Sawdust
Bute Storr Sawdust

Burgundy
Steelcut 3 (0682)

Light Beige
Steelcut 3 (0240)

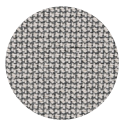
60112
Cura

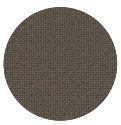
61169
Cura

60019
Cura

Rosewood
Sera

Pine
Sera (Hem exclusive)

Black (RAL 9005)
Powder Coated Steel

Brushed Stainless Steel

3D model
3D files of all products are available on the product pages on hem.com

Hai Lounge Chair

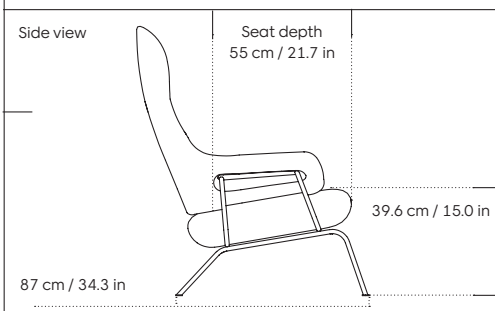

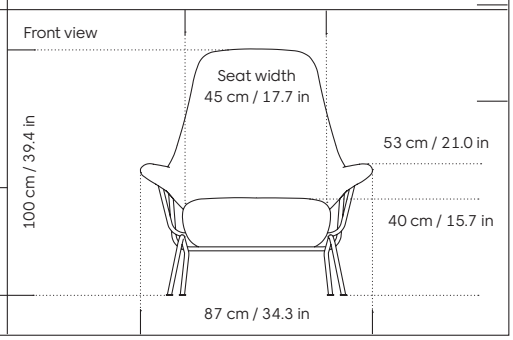

Hai Ottoman

Design by Luca Nichetto

The Hai Chair does everything a classic armchair does and more. Luca Nichetto's design is strong—very strong—ergonomic, and handsome, but smart about it. A lightweight metal skeleton is covered in molded foam and soft, inviting textile for maximum comfort. Although sleek and contemporary, the wide arms and high back embrace the sitter in a way that inspires total, classic relaxation. The Hai Chair's sleek looks can be admired from every angle, even from behind, making this an armchair that nobody should push into a corner.

Upholstery
Uniform Mélange
by Febrik x Kvadrat (Netherlands)
68% New wool, 22% Nylon, 10% Polyester
100,000 Martindale
Pilling 4, Lightfastness 6
Flame resistance EN 1021: Part 1 & 2, BS 5852: Part 1, US Cal. TB 117

Bute Storr
by Bute Fabrics (Scotland)
97 % Pure New Wool, 3% Nylon
65000 Martindale
Pilling 4-5, Lightfastness 5
Flame resistance IMO FTP Code(2010) Annex 1, Part 8, BS 5852: Part 1 & 2 (Crib 5), US Cal. TB 121

Steelcut 3
by Kvadrat (UK)
90% New Wool, 10% Nylon
100,000 Martindale
Pilling 3-4, Lightfastness 6
EN 1021: Part 1 & 2, US Cal. TB 117-2013, BS 5852: Part 1

Cura
by Gabriel (Denmark)
98% Recycled Polyester, 2% Polyester
100,000 Martindale
Pilling 4-5; Lightfastness 5-8
Flame resistance EN 1021: Part 1 & 2, US Cal. TB 117-2013

Sera
by Rohi (Germany)
94% Virgin Wool, 6% Polyamide
122,000 Martindale
Pilling 4-5
Lightfastness 5-8
Flame resistance EN 1021: Part 1 & 2, BS 5852: Part 1 & 2 (Crib 5), US Cal. TB 117

Leg material
Powder Coated Steel
Brushed Stainless Steel

Inside material
PU foam
Wooden structure

Country of origin
Lithuania

Tests & certifications
EN 16139:2013 – L2: Extreme use – Furniture – Strength, durability and safety – Requirements for non-domestic seating

Product accessory
Hai Lounge Chair

Samples
We supply samples of our material finishes. You can order them directly from hem.com/samples

Graded-in Textile and Made-To-Order
Please refer to the price list or reach out to your local representative for our made-to-order options

Ink
Uniform Mélange (0793)

Pink
Uniform Mélange (0623)

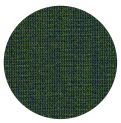

Peacock
Uniform Mélange (0983)

Liquorice
Uniform Mélange (0353)

Shell
Uniform Mélange (0103)

Charcoal
Uniform Mélange (0193)

Eggshell
Bute Storr Eggshell

Pebble
Bute Storr Pebble

Sawdust
Bute Storr Sawdust

Burgundy
Steelcut 3 (0682)

Light Beige
Steelcut 3 (0240)

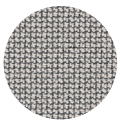

60112
Cura

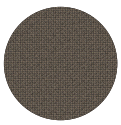

61169
Cura

60019
Cura

Rosewood
Sera

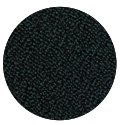

Pine
Sera (Hem exclusive)

Black (RAL 9005)
Powder Coated Steel

Brushed Stainless Steel

3D model
3D files of all products are available on the product pages on hem.com

Hai Ottoman

Top view

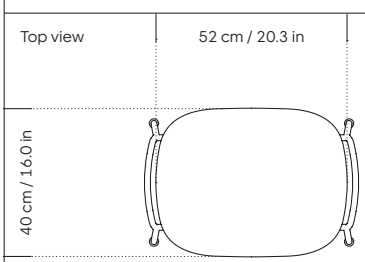

Front view

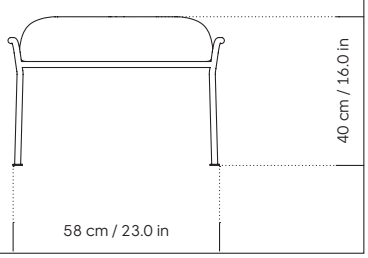

Hunk Lounge Chair with Armrests

Design by Kwangho Lee

The elemental block-like form of the Hunk armchair is especially characteristic of designer Kwangho Lee. In fact, the Hunk Chair is extra in every way. With exaggerated proportions, a profile so chunky it would make The Flintstones blush, and a ground-breaking construction made entirely from natural materials, Hunk is a whole lot of easy seating and conscientious furniture design. Although geometric in form, the chair's deep natural upholstery is made for melting into - natural latex and coco mat provide extreme cushioning whilst a fine bouclé textile creates a super-soft finish. Hunk is destined for lounging greatness.

Upholstery
Tiree
by Bute Fabrics (Scotland)
92% Pure New Wool, 8% Nylon
50,000 Martindale
Pilling 3-4
Lightfastness 5-8
Flame resistance EN 1021: Part 1 & 2, BS 5852: Part 1 & 2 (Crib 5), US Cal. TB 117-2013

Amdal
by Gudbrandsdalen Uldvarefabrik (Norway)
70% Virgin Wool, 30% Viscose
100,000 Martindale
Pilling 4
Lightfastness 5-7
Flame resistance EN 1021: Part 1 & 2, BS 5852: Part 1 & 2 (Crib 5), US Cal. TB 117-2013

Ingrid
by Dedar (Italy)
49% Polyester Trevira CS Recycled, 46% PES FR, 5% PES FR Recycled
70,000 Martindale
Flame resistance Italy Class 1, France M1, NFPA 260, UK BS5852 CIGAR. TEST, UK BS5852 CIG/MATCH, US Cal. TB 117-2013

Inside material
Wooden Structure
Latex Foam
Cocomat
Wool

Country of origin
Germany

3D model
3D files of all products are available on the product pages on hem.com

Swan
Tiree

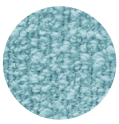

Icicle
Tiree

Chocolate Brown
Tiree

Beige
Amdal

Checkered Black/White
Ingrid

Samples
We supply samples of our material finishes. You can order them directly from hem.com/samples

Graded-in Textile and Made-To-order:
Please refer to the price list or reach out to your local representative for our made to made-to-order options.

Hunk Lounge Chair with Armrest

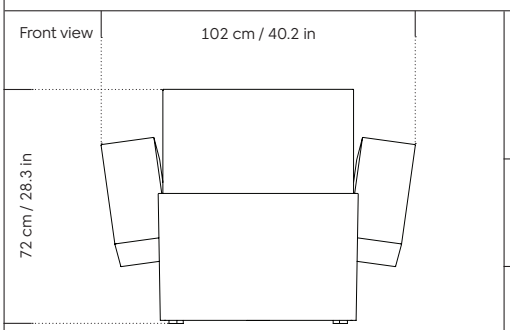

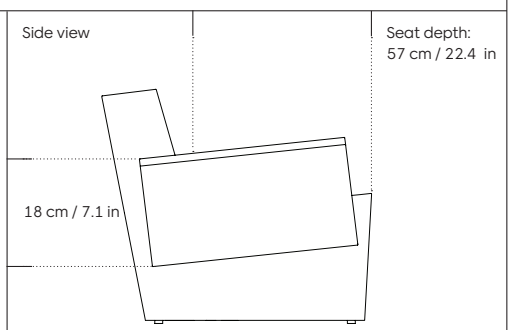

Hunk Lounge Chair with Armrest

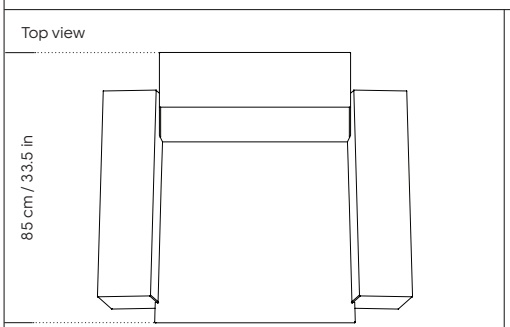

Hunk Lounge Chair

Design by Kwangho Lee

The elemental block-like form of the Hunk armchair is especially characteristic of designer Kwangho Lee. In fact, the Hunk Chair is extra in every way. With exaggerated proportions, a profile so chunky it would make The Flintstones blush, and a ground-breaking construction made entirely from natural materials, Hunk is a whole lot of easy seating and conscientious furniture design. Although geometric in form, the chair's deep natural upholstery is made for melting into - natural latex and coco mat provide extreme cushioning whilst a fine bouclé textile creates a super-soft finish. Hunk is destined for lounging greatness.

Upholstery
Tiree
by Bute Fabrics (Scotland)
92% Pure New Wool, 8% Nylon
50,000 Martindale
Pilling 3-4
Lightfastness 5-8
Flame resistance EN 1021: Part 1 & 2, BS 5852: Part 1 & 2 (Crib 5), US Cal. TB 117-2013

Amdal
by Gudbrandsdalen Uldvarefabrik (Norway)
70% Virgin Wool, 30% Viscose
100,000 Martindale
Pilling 4
Lightfastness 5-7
Flame resistance EN 1021: Part 1 & 2, BS 5852: Part 1 & 2 (Crib 5), US Cal. TB 117-2013

Inside material
Wooden Structure
Latex Foam
Cocomat
Wool

Country of origin
Germany

3D model
3D files of all products are available on the product pages on hem.com

Swan
Tiree

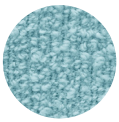

Icicle
Tiree

Chocolate Brown
Tiree

Beige
Amdal

Samples
We supply samples of our material finishes. You can order them directly from hem.com/samples

Graded-in Textile and Made-To-order:
Please refer to the price list or reach out to your local representative for our made to made-to-order options.

Hunk Lounge Chair with Armrest

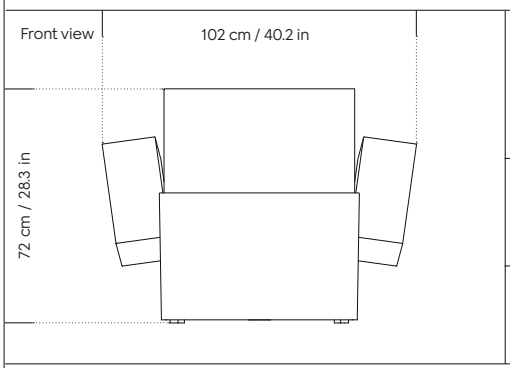

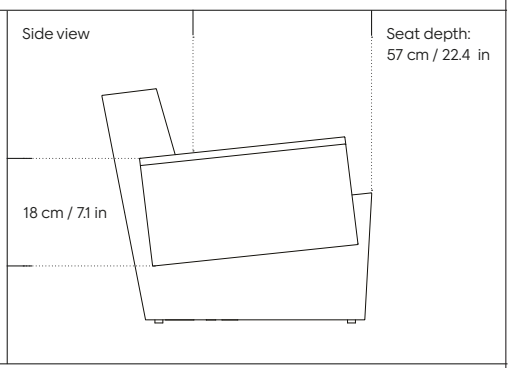

Hunk Lounge Chair with Armrest

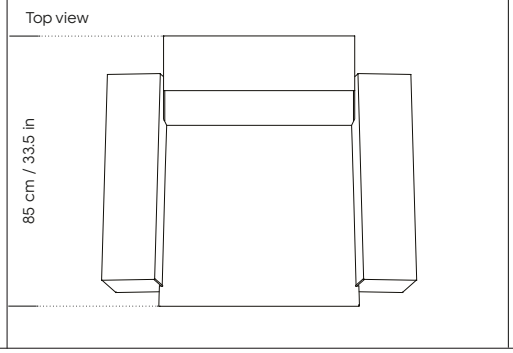

Kendo Bar Chair

Design by LucidiPevere

The Kendo Chair's soft, wrap-around upper offers an appealingly ergonomic seating experience. Simultaneously protective and inviting, this design by LucidiPevere offers a shielding shape combined with a gentle embrace. The generous seat is wide and comfortable, allowing you to move freely, shift position, express yourself. Whether around a boardroom or a dining table, Kendo keeps you comfortable for long periods of time. Its sturdy welded frame makes this chair built to last. A barstool and bar chair complete the Kendo family.

Upholstery
Sera
by Rohi (Germany)
94% Virgin Wool, 6% Polyamide
122,000 Martindale
Pilling 4-5; Lightfastness 5-8
Flame resistance EN 1021: Part 1 & 2, BS 5852: Part 1 & 2 (Crib 5), US Cal. TB 117-2013

Cura
by Gabriel (Denmark)
98% Recycled Polyester, 2% Polyester
100,000 Martindale
Pilling 4-5; Lightfastness 5-8
Flame resistance EN 1021: Part 1 & 2, US Cal. TB 117-2013

Bute Storr
by Bute Fabrics (Scotland)
97% Pure New Wool, 3% Nylon
65,000 Martindale
Lightfastness 5 (BS EN ISO 105 – B02)
Flame resistance IMO FTP Code(2010) Annex 1, Part 8, BS 5852: PART 1 & 2 (Crib 5), US Cal. TB 117

Leg material
Steel
Powder Coated

Inside material
PU foam
Steel structure & wooden structure

Tests & certifications
EN 16139:2013 – L2: Extreme use – Furniture – Strength, durability and safety – Requirements for non-domestic seating – ANSI/BIFMA X5.1-2017 American National Standard For Office Furnishings – General Purpose Office Chairs

Country of origin
Lithuania

Porcelain
Sera

Graphite
Sera

Canyon
Sera (Hem exclusive)

Pine
Sera (Hem exclusive)

Rosewood
Sera

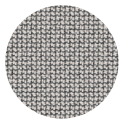

60112
Cura

61169
Cura

60019
Cura

Eggshell
Bute Storr

Sawdust
Bute Storr

Pebble
Bute Storr

Black (RAL 9005)
Powder Coated Steel

MTO
Reach out to your local representative for the full selection of made-to-order options.

3D model
3D files of all products are available on the product pages on hem.com

Kendo Bar Chair

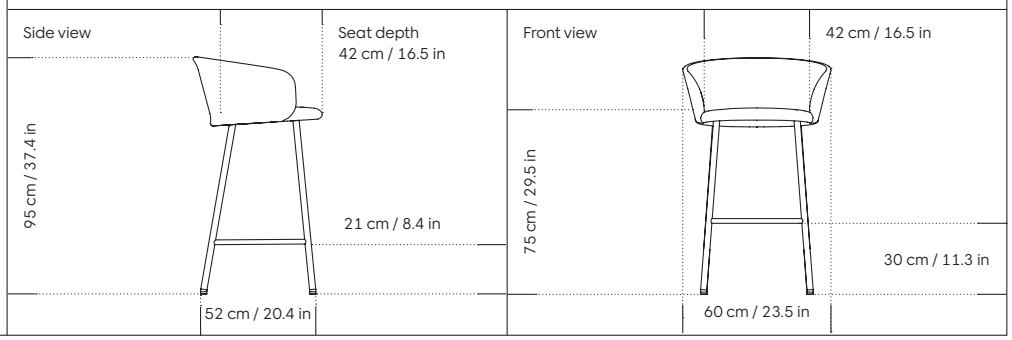

Kendo Bar Stool

Design by LucidiPevere

The Kendo Chair's soft, wrap-around upper offers an appealingly ergonomic seating experience. Simultaneously protective and inviting, this design by LucidiPevere offers a shielding shape combined with a gentle embrace. The generous seat is wide and comfortable, allowing you to move freely, shift position, express yourself. Whether around a boardroom or a dining table, Kendo keeps you comfortable for long periods of time. Its sturdy welded frame makes this chair built to last. A barstool and bar chair complete the Kendo family.

Upholstery
Sera
by Rohi (Germany)
94% Virgin Wool, 6% Polyamide
122,000 Martindale
Pilling 4-5; Lightfastness 5-8
Flame resistance EN 1021: Part 1 & 2, BS 5852: Part 1 & 2 (Crib 5), US Cal. TB 117-2013

Cura
by Gabriel (Denmark)
98% Recycled Polyester, 2% Polyester
100,000 Martindale
Pilling 4-5; Lightfastness 5-8
Flame resistance EN 1021: Part 1 & 2, US Cal. TB 117-2013

Bute Storr
by Bute Fabrics (Scotland)
97% Pure New Wool, 3% Nylon
65,000 Martindale
Lightfastness 5 (BS EN ISO 105 – B02)
Flame resistance IMO FTP Code(2010) Annex 1, Part 8, BS 5852: PART 1 & 2 (Crib 5), US Cal. TB 117

Leg material
Steel
Powder Coated

Inside material
PU foam
Wooden structure

Tests & certifications
EN 16139:2013 – L2: Extreme use – Furniture – Strength, durability and safety – Requirements for non-domestic seating – ANSI/BIFMA X5.1-2017 American National Standard For Office Furnishings – General Purpose Office Chairs

Country of origin
Lithuania

Porcelain
Sera

Graphite
Sera

Canyon
Sera (Hem exclusive)

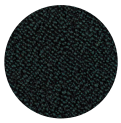

Pine
Sera (Hem exclusive)

Rosewood
Sera

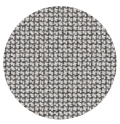

60112
Cura

61169
Cura

60019
Cura

Eggshell
Bute Storr

Sawdust
Bute Storr

Pebble
Bute Storr

Black (RAL 9005)
Powder Coated Steel

MTO
Reach out to your local representative for the full selection of made-to-order options.

3D model
3D files of all products are available on the product pages on hem.com

Kendo Bar Stool

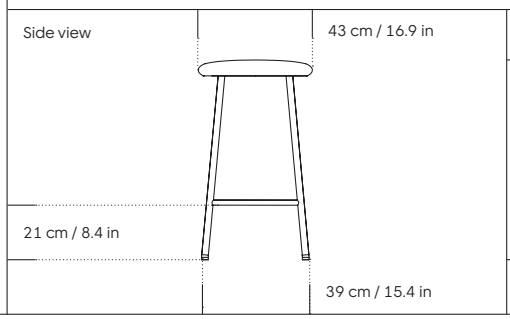

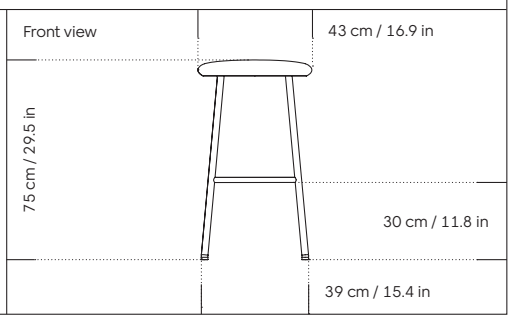

Kendo Counter Stool

Design by LucidiPevere

The Kendo Chair's soft, wrap-around upper offers an appealingly ergonomic seating experience. Simultaneously protective and inviting, this design by LucidiPevere offers a shielding shape combined with a gentle embrace. The generous seat is wide and comfortable, allowing you to move freely, shift position, express yourself. Whether around a boardroom or a dining table, Kendo keeps you comfortable for long periods of time. Its sturdy welded frame makes this chair built to last. A barstool and bar chair complete the Kendo family.

Upholstery
Sera
by Rohi (Germany)
94% Virgin Wool, 6% Polyamide
122,000 Martindale
Pilling 4-5; Lightfastness 5-8
Flame resistance EN 1021: Part 1 & 2, BS 5852: Part 1 & 2 (Crib 5), US Cal. TB 117-2013

Cura
by Gabriel (Denmark)
98% Recycled Polyester, 2% Polyester
100,000 Martindale
Pilling 4-5; Lightfastness 5-8
Flame resistance EN 1021: Part 1 & 2, US Cal. TB 117-2013

Bute Storr
by Bute Fabrics (Scotland)
97% Pure New Wool, 3% Nylon
65,000 Martindale
Lightfastness 5 (BS EN ISO 105 – B02)
Flame resistance IMO FTP Code(2010) Annex 1, Part 8, BS 5852: PART 1 & 2 (Crib 5), US Cal. TB 117

Leg material
Steel
Powder Coated

Inside material
PU foam
Wooden structure

Tests & certifications
EN 16139:2013 – L2: Extreme use – Furniture – Strength, durability and safety – Requirements for non-domestic seating – ANSI/BIFMA X5.1-2017 American National Standard For Office Furnishings – General Purpose Office Chairs

Country of origin
Lithuania

Porcelain
Sera

Graphite
Sera

Canyon
Sera (Hem exclusive)

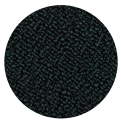

Pine
Sera (Hem exclusive)

Rosewood
Sera

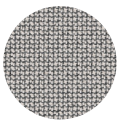

60112
Cura

61169
Cura

60019
Cura

Eggshell
Bute Storr

Sawdust
Bute Storr

Pebble
Bute Storr

Black (RAL 9005)
Powder Coated Steel

MTO
Reach out to your local representative for the full selection of made-to-order options.

3D model
3D files of all products are available on the product pages on hem.com

Kendo Counter Stool

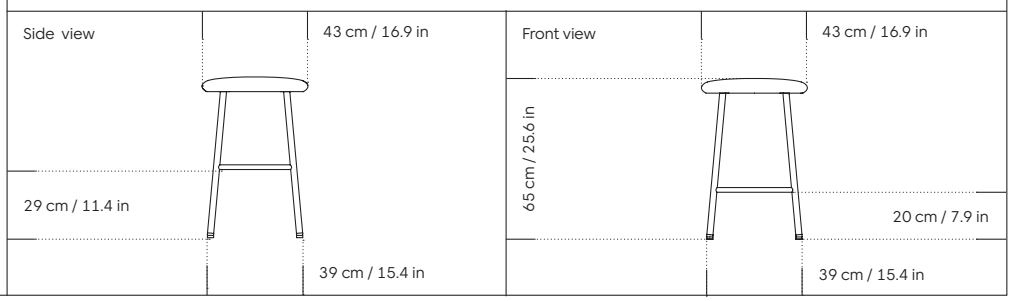

Kendo Chair

Design by LucidiPevere

The Kendo Chair's soft, wrap-around upper offers an appealingly ergonomic seating experience. Simultaneously protective and inviting, this design by LucidiPevere offers a shielding shape combined with a gentle embrace. The generous seat is wide and comfortable, allowing you to move freely, shift position, express yourself. Whether around a boardroom or a dining table, Kendo keeps you comfortable for long periods of time. Its sturdy welded frame makes this chair built to last. A barstool and bar chair complete the Kendo family.

Upholstery
Sera
by Rohi (Germany)
94% Virgin Wool, 6% Polyamide
122,000 Martindale
Pilling 4-5; Lightfastness 5-8
Flame resistance EN 1021: Part 1 & 2, BS 5852: Part 1 & 2 (Crib 5), US Cal. TB 117-2013

Elmosoft Leather
by Elmo (Sweden)
Scandinavian Grain Leather, Semi-aniline
Flame resistance EN 1021: Part 1 & 2, BS 5852: Part 1 & 2 (Crib 5), DIN 4102 - 1 (B1), US Cal. TB 117-2013

Cura
by Gabriel (Denmark)
98% Recycled Polyester, 2% Polyester
100,000 Martindale
Pilling 4-5; Lightfastness 5-8
Flame resistance EN 1021: Part 1 & 2, US Cal. TB 117-2013

Tiree
by Bute Fabrics (Scotland)
92% Pure New Wool, 8% Nylon
50,000 Martindale
Pilling 3-4; Lightfastness 5
Flame resistance EN 1021: Part 1 & 2, BS 5852: Part 1 & 2 (Crib 5), US Cal. TB 117-2013

Bute Storr
by Bute Fabrics (Scotland)
97% Pure New Wool, 3% Nylon
65,000 Martindale
Lightfastness 5 (BS EN ISO 105 – B02)
Flame resistance IMO FTP Code(2010) Annex 1, Part 8, BS 5852: PART 1 & 2 (Crib 5), US Cal. TB 117

Leg material
Steel
Powder Coated

Inside material
PU foam
Steel structure & wooden structure

Tests & certifications
EN 16139:2013 – L2: Extreme use – Furniture – Strength, durability and safety – Requirements for non-domestic seating – ANSI/BIFMA X5.1-2017 American National Standard For Office Furnishings – General Purpose Office Chairs

Country of origin
Lithuania

Porcelain
Sera

Graphite
Sera

Canyon
Sera (Hem exclusive)

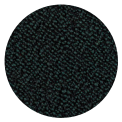
Pine
Sera (Hem exclusive)

Rosewood
Sera

Cognac
Elmosoft Leather (54035)

Black
Elmosoft Leather (99999)

Dark Blue
Cura

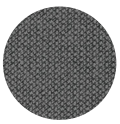
Grey
Cura

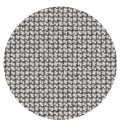
60112
Cura

61169
Cura

60019
Cura

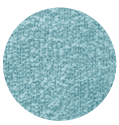
Icicle
Tiree

Conker
Tiree

Eggshell
Bute Storr

Sawdust
Bute Storr

Pebble
Bute Storr

Black (RAL 9005)
Powder Coated Steel

MTO
Reach out to your local representative for the full selection of made-to-order options.

3D model
3D files of all products are available on the product pages on hem.com

Kendo Chair

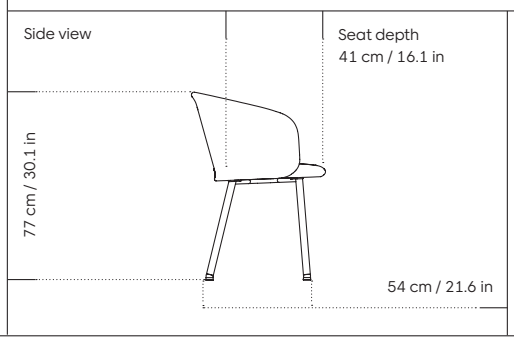

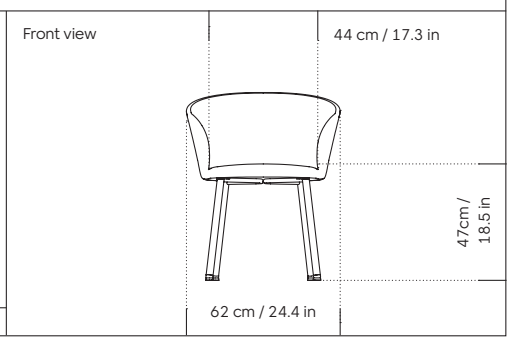

Kendo Swivel Chair 4-star Return

Design by LucidiPevere

The Kendo Chair's soft, wrap-around upper offers an appealingly ergonomic seating experience. Simultaneously protective and inviting, this design by LucidiPevere offers a shielding shape combined with a gentle embrace. The generous seat is wide and comfortable, allowing you to move freely, shift position, express yourself. Whether around a boardroom or a dining table, Kendo keeps you comfortable for long periods of time. Its sturdy welded frame makes this chair built to last. A barstool and bar chair complete the Kendo family.

Upholstery
Sera
by Rohi (Germany)
94% Virgin Wool, 6% Polyamide
122,000 Martindale
Pilling 4-5; Lightfastness 5-8
Flame resistance EN 1021: Part 1 & 2, BS 5852: Part 1 & 2 (Crib 5), US Cal. TB 117-2013

Elmosoft Leather
by Elmo (Sweden)
Scandinavian Grain Leather, Semi-aniline
Flame resistance EN 1021: Part 1 & 2, BS 5852: Part 1 & 2 (Crib 5), DIN 4102 - 1 (B1), US Cal. TB 117-2013

Cura
by Gabriel (Denmark)
98% Recycled Polyester, 2% Polyester
100,000 Martindale
Pilling 4-5; Lightfastness 5-8
Flame resistance EN 1021: Part 1 & 2, US Cal. TB 117-2013

Tiree
by Bute Fabrics (Scotland)
92% Pure New Wool, 8% Nylon
50,000 Martindale
Pilling 3-4; Lightfastness 5
Flame resistance EN 1021: Part 1 & 2, BS 5852: Part 1 & 2 (Crib 5), US Cal. TB 117-2013

Bute Storr
by Bute Fabrics (Scotland)
97% Pure New Wool, 3% Nylon
65,000 Martindale
Lightfastness 5 (BS EN ISO 105 – B02)
Flame resistance IMO FTP Code(2010) Annex 1, Part 8, BS 5852: PART 1 & 2 (Crib 5), US Cal. TB 117

Leg material
Steel / Aluminum
Powder Coated / Polished

Inside material
PU foam
Steel structure & wooden structure

Tests & certifications
EN 16139:2013 – L2: Extreme use – Furniture – Strength, durability and safety – Requirements for non-domestic seating – ANSI/BIFMA X5.1-2017 American National Standard For Office Furnishings – General Purpose Office Chairs

Country of origin
Lithuania

Porcelain
Sera

Graphite
Sera

Canyon
Sera (Hem exclusive)

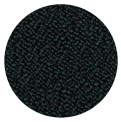
Pine
Sera (Hem exclusive)

Rosewood
Sera

Cognac
Elmosoft Leather (54035)

Black
Elmosoft Leather (99999)

Dark Blue
Cura

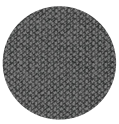
Grey
Cura

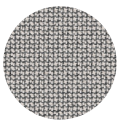
60112
Cura

61169
Cura

60019
Cura

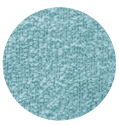
Icicle
Tiree

Conker
Tiree

Eggshell
Bute Storr

Sawdust
Bute Storr

Pebble
Bute Storr

Black (RAL 9005)
Powder Coated
Steel / Aluminium

Polished
Steel / Aluminium

MTO
Reach out to your local representative for the full selection of made-to-order options.

3D model
3D files of all products are available on the product pages on hem.com

3D model
3D files of all products are available on the product pages on hem.com

Kendo Swivel Chair 4-star Return

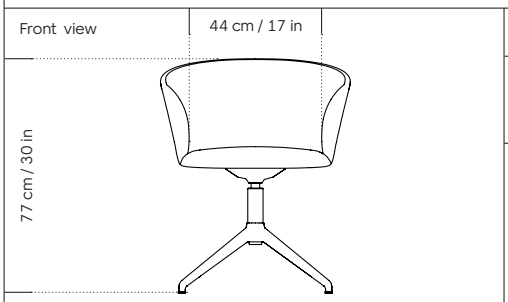

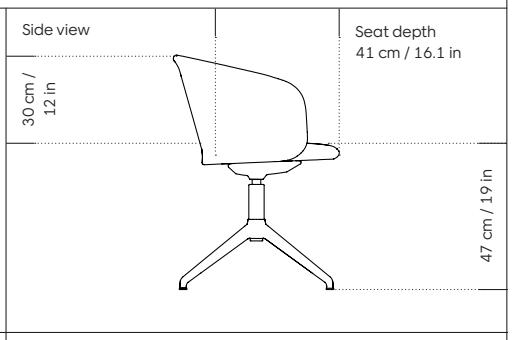

Kendo Swivel Chair 4-star Return

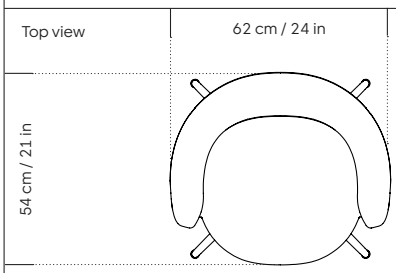

Kendo Swivel Chair
5-star Castors

Design by LucidiPevere

The Kendo Chair's soft, wrap-around upper offers an appealingly ergonomic seating experience. Simultaneously protective and inviting, this design by LucidiPevere offers a shielding shape combined with a gentle embrace. The generous seat is wide and comfortable, allowing you to move freely, shift position, express yourself. Whether around a boardroom or a dining table, Kendo keeps you comfortable for long periods of time. Its sturdy welded frame makes this chair built to last. A barstool and bar chair complete the Kendo family.

Upholstery
Sera
by Rohi (Germany)
94% Virgin Wool, 6% Polyamide
122,000 Martindale
Pilling 4-5; Lightfastness 5-8
Flame resistance EN 1021: Part 1 & 2, BS 5852: Part 1 & 2 (Crib 5), US Cal. TB 117-2013

Elmosoft Leather
by Elmo (Sweden)
Scandinavian Grain Leather, Semi-aniline
Flame resistance EN 1021: Part 1 & 2, BS 5852: Part 1 & 2 (Crib 5), DIN 4102 - 1 (B1), US Cal. TB 117-2013

Cura
by Gabriel (Denmark)
98% Recycled Polyester, 2% Polyester
100,000 Martindale
Pilling 4-5; Lightfastness 5-8
Flame resistance EN 1021: Part 1 & 2, US Cal. TB 117-2013

Tiree
by Bute Fabrics (Scotland)
92% Pure New Wool, 8% Nylon
50,000 Martindale
Pilling 3-4; Lightfastness 5
Flame resistance EN 1021: Part 1 & 2, BS 5852: Part 1 & 2 (Crib 5), US Cal. TB 117-2013

Bute Storr
by Bute Fabrics (Scotland)
97% Pure New Wool, 3% Nylon
65,000 Martindale
Lightfastness 5 (BS EN ISO 105 – B02)
Flame resistance IMO FTP Code(2010) Annex 1, Part 8, BS 5852: PART 1 & 2 (Crib 5), US Cal. TB 117

Leg material
Steel / Aluminum
Powder Coated / Polished

Inside material
PU foam
Steel structure & wooden structure

Tests & certifications
EN 16139:2013 – L2: Extreme use – Furniture – Strength, durability and safety – Requirements for non-domestic seating – ANSI/BIFMA X5.1-2017 American National Standard For Office Furnishings – General Purpose Office Chairs

Country of origin
Lithuania

Porcelain
Sera

Graphite
Sera

Canyon
Sera (Hem exclusive)

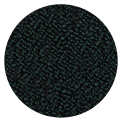
Pine
Sera (Hem exclusive)

Rosewood
Sera

Cognac
Elmosoft Leather (54035)

Black
Elmosoft Leather (99999)

Dark Blue
Cura

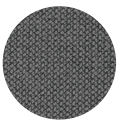
Grey
Cura

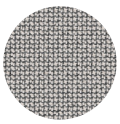
60112
Cura

61169
Cura

60019
Cura

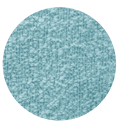
Icicle
Tiree

Conker
Tiree

Eggshell
Bute Storr

Sawdust
Bute Storr

Pebble
Bute Storr

Black (RAL 9005)
Powder Coated
Steel / Aluminium

Polished
Steel / Aluminium

MTO
Reach out to your local representative for the full selection of made-to-order options.

3D model
3D files of all products are available on the product pages on hem.com

3D model
3D files of all products are available on the product pages on hem.com

Kendo Swivel Chair 5-star Castors

Front view

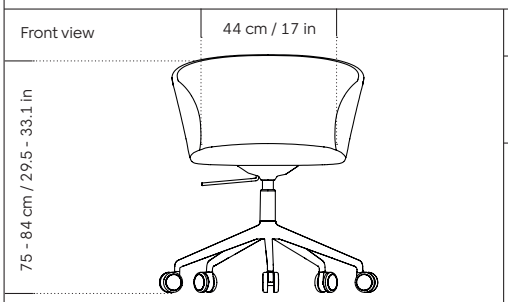

Side view

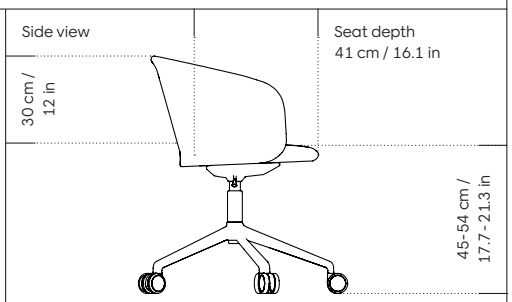

Kendo Swivel Chair 5-star Castors

Top view

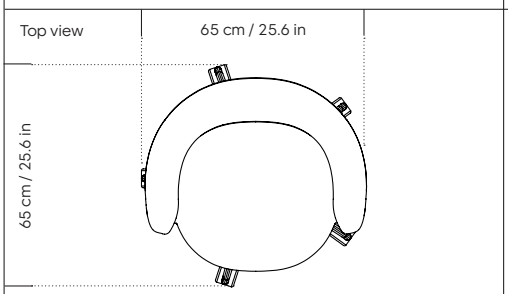

Last Stool

Design by Max Lamb

The Last Stool is one of our most beloved and most enduring products. Designer Max Lamb set out to make the “last” stool—the most durable, most elemental, most functional, most definitive object. The stool is spun from a single sheet of metal, making it incredibly strong, and each has a wide indentation for easy lifting and movement. The Last Stool is for sitting—it works around every type of table and in every kind of interior—but consider it as a handsome occasional table, too. Choose between beautiful copper or brass, whose surface will elegantly patina over time; single-color enamel for an immediate chromatic punctuation mark; or a hand-splattered enamel finish, where each stool is unique.

Material
Steel
Enamelled
High Gloss

Copper
Polished

Brass
Polished

Country of origin
Enameled: Poland
Polished Brass & Copper: Italy

Tests & certifications
ANSI/BIFMA X5.1-2017 American National Standard For Office Furnishings – General Purpose Office Chairs

EN 16139:2013, Furniture - Strength, durability and safety - Requirements for non domestic seating Test severity L2: Extreme use: E.g. in night-clubs, police stations, transport terminals, sport changing rooms, prisons, barracks (non-controlled areas).

Black
Enamelled Steel

Sand
Enamelled Steel

Signal White
Enamelled Steel

Pale Lime
Enamelled Steel

Black / White Splatter
Enamelled Steel

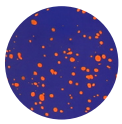

Blue / Orange Splatter
Enamelled Steel

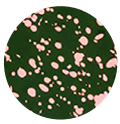

Green / Pink Splatter
Enamelled Steel

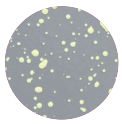

Grey / Lime Splatter
Enamelled Steel

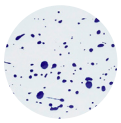

White / Blue Splatter
Enamelled Steel

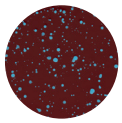

Burgundy / Sky Blue Splatter
Enamelled Steel

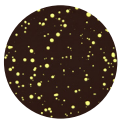

Brown / Pale Lime Splatter
Enamelled Steel

Polished Copper

Polished Brass

Samples
We supply samples of our material finishes. You can order them directly from hem.com/samples

Made-To-Order
Please refer to the price list or reach out to your local representative for our made-to-order options

3D model
3D files of all products are available on the product pages on hem.com

Last Stool

Top view

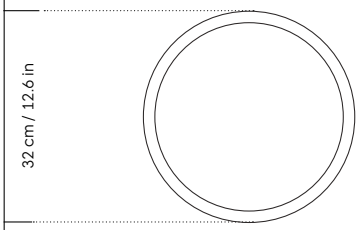

Front view

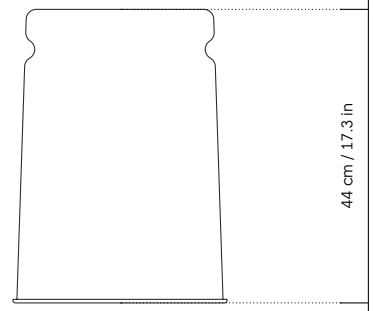

Last Stool with felt strips for stacking

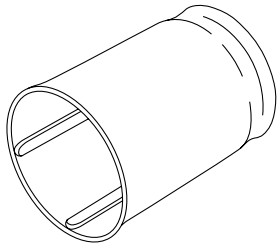

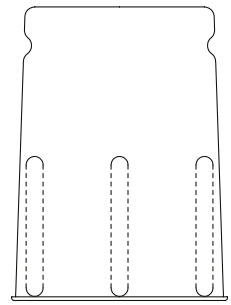

Stackability

Last Stool
1 – 10

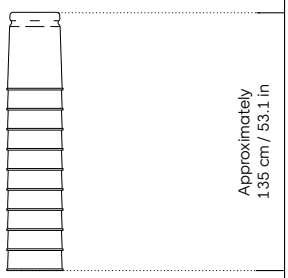

The Last Stools can only be stacked by using the custom felt strips you receive in your package. You can also order the felt strips on our website. Please only stack a maximum of 10 Last Stools and never stack them without the felt strips. Do not sit on the stools when they are stacked.

Puffy Lounge Chair

Design by Faye Toogood

The detachable upholstery of the Puffy Lounge Chair is fat and plump, its generous shape spills freely over the sides of a tubular steel frame which, in stark contrast, is hard-lined and strong. The two key elements of this seating design by Faye Toogood are in purposeful and playful juxtaposi- tion. The elementary frame is inspired by the rational structure of classic modernist design, whilst the extravagant quilt-like upholstery warmly embraces and envelopes, is comforting and reassuring. The Puffy Chair frame is available in powder-coated or sand-blasted steel finishes and a choice of thick canvas, chunky bouclé or luxurious leather upholstery.

Upholstery
Disco Coex
by Chioccarello (Italy)
70% Cotton, 20% Acrylic, 5% Viscose, 5% Linen
>50,000 Martindale
Pilling 4-5
Lightfastness 4-5
Flame resistance IMO, 1 IM UNI 9175, EN 1021-1:2006, EN 1021-2:2006, CRIB 5, TB 117:2013

Elmosoft Leather
by Elmo (Sweden)
Scandinavian Grain Leather, Semi-aniline
Lightfastness 6

Bute Storr
by Bute Fabrics (Scotland)
97% Pure New Wool, 3% Nylon
65,000 Martindale
Lightfastness 5 (BS EN ISO 105 – B02)
Flame resistance IMO FTP Code(2010) Annex 1, Part 8, BS 5852: PART 1 & 2 (Crib 5), US Cal. TB 117

Velluto Coex
by Chioccarello (Italy)
100% Cotton
65,000 Martindale
Pilling 4-5
Lightfastness 5
Flame resistance IMO, 1 IM UNI 9175, EN 1021-1:2006, EN 1021-2:2006, CRIB 5, TB 117:2013

Leg material
Steel
Stainless, Sand Blasted
Powder Coated

Inside material
50% PU Foam, 50% Ball Fiber

Country of origin
Lithuania

Tests & certifications
EN 16139:2013 – L2: Extreme use – Furniture – Strength, durability and safety – Requirements for non-domestic seating

3D model
3D files of all products are available on the product pages on hem.com

Product accessory
Puffy Lounge Ottoman

Natural
Disco COEX (Number 5)

Anthracite
Disco Coex (Number 26)

Sand Leather*
Elmosoft Leather (02119)

Elmosoft Leather (03009)

Black Leather
Elmosoft Leather (99999)

Cognac Leather
Elmosoft Leather (54035)

Dark Green Leather
Elmosoft Leather (98015)

Light Blue Leather*
Elmosoft Leather (87021)

Eggshell
Bute Storr Eggshell

Sawdust
Bute Storr Sawdust

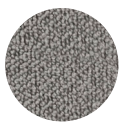

Pebble
Bute Storr Pebble

VL30
Velluto Coex

Cream (RAL 9001)
Powder Coated Steel

Traffic Red (RAL 3020)
Powder Coated Steel

Chocolate Brown (RAL 8017)
Powder Coated Steel

Stainless
Steel

Black Grey (RAL 7021)
Powder Coated Steel

Samples
We supply samples of our material finishes. You can order them directly from hem.com/samples

*expiring finish

Puffy Lounge Chair Frame

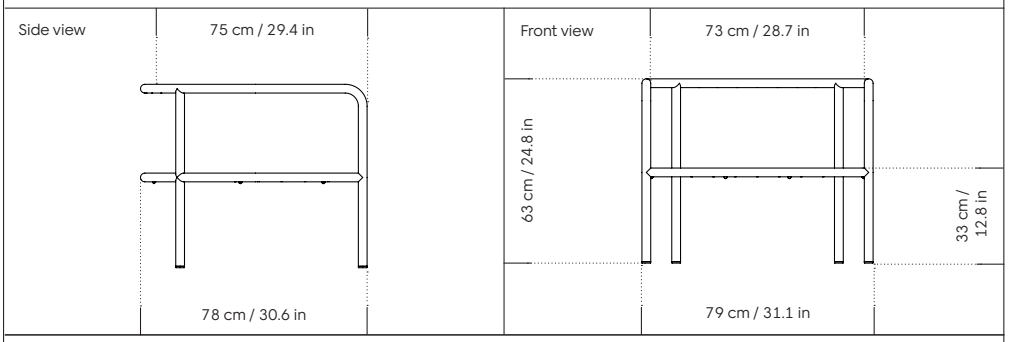

Puffy Lounge Chair

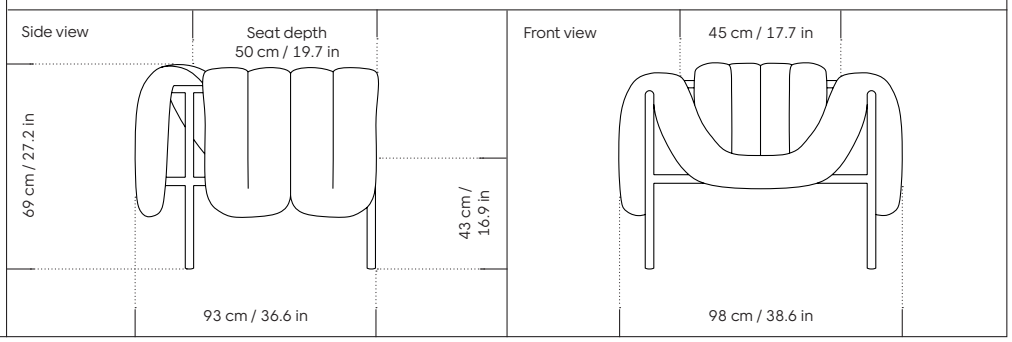

Puffy Ottoman

Design by Faye Toogood

The detachable upholstery of the Puffy Lounge Chair is fat and plump, its generous shape spills freely over the sides of a tubular steel frame which, in stark contrast, is hard-lined and strong. The two key elements of this seating design by Faye Toogood are in purposeful and playful juxtaposi- tion. The elementary frame is inspired by the rational structure of classic modernist design, whilst the extravagant quilt-like upholstery warmly embraces and envelopes, is comforting and reassuring. The Puffy Chair frame is available in powder-coated or sand-blasted steel finishes and a choice of thick canvas, chunky bouclé or luxurious leather upholstery.

Upholstery
Disco Coex
by Chioccarello (Italy)
70% Cotton, 20% Acrylic, 5% Viscose, 5% Linen
>50,000 Martindale
Pilling 4-5
Lightfastness 4-5
Flame resistance IMO, 1 IM UNI 9175, EN 1021-1:2006, EN 1021-2:2006, CRIB 5, TB 117:2013

Elmosoft Leather
by Elmo (Sweden)
Scandinavian Grain Leather, Semi-aniline
Lightfastness 6

Bute Storr
by Bute Fabrics (Scotland)
97% Pure New Wool, 3% Nylon
65,000 Martindale
Lightfastness 5 (BS EN ISO 105 – B02)
Flame resistance IMO FTP Code(2010) Annex 1, Part 8, BS 5852: PART 1 & 2 (Crib 5), US Cal. TB 117

Velluto Coex
by Chioccarello (Italy)
100% Cotton
65,000 Martindale
Pilling 4-5
Lightfastness 5
Flame resistance IMO, 1 IM UNI 9175, EN 1021-1:2006, EN 1021-2:2006, CRIB 5, TB 117:2013

Leg material
Steel
Stainless, Sand Blasted
Powder Coated

Inside material
50% PU Foam, 50% Ball Fiber

Country of origin
Lithuania

Tests & certifications
EN 16139:2013 – L2: Extreme use – Furniture – Strength, durability and safety – Requirements for non-domestic seating

3D model
3D files of all products are available on the product pages on hem.com

Product accessory
Puffy Lounge Lounge Chair

Natural
Disco COEX (Number 5)

Anthracite
Disco Coex (Number 26)

Sand Leather*
Elmosoft Leather (02119)

Elmosoft Leather (03009)

Black Leather
Elmosoft Leather (99999)

Cognac Leather
Elmosoft Leather (54035)

Eggshell
Bute Storr Eggshell

Sawdust
Bute Storr Sawdust

VL30
Velluto Coex

Cream (RAL 9001)
Powder Coated Steel

Black Grey (RAL 7021)
Powder Coated Steel

Stainless
Steel

MTO
Reach out to your local representative for the full selection of made-to-order options.

*expiring finish

Puffy Lounge Chair Frame

Side view

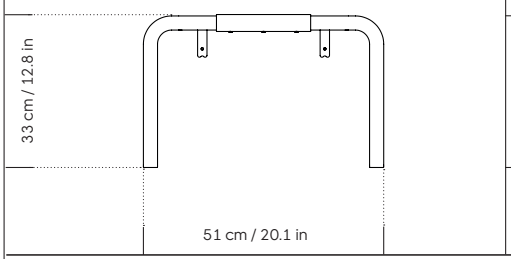

Front view

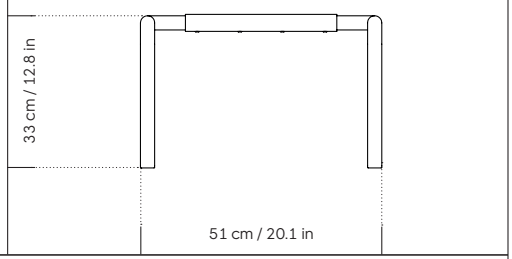

Puffy Lounge Chair

Side view

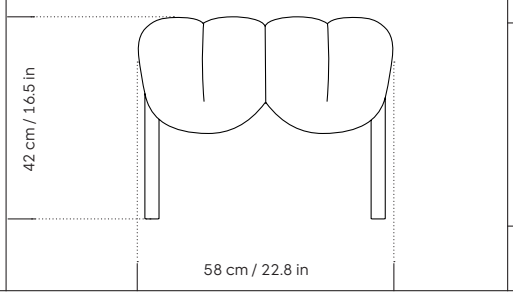

Front view

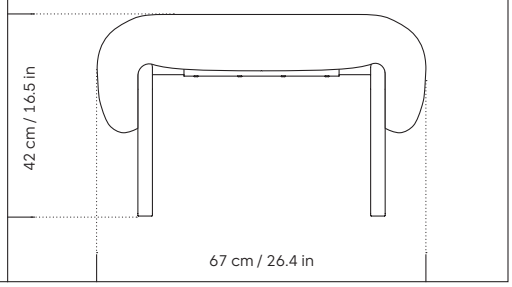

Touchwood Bar Chair

Design by Lars Beller Fjetland

Subtle, strong, and elemental, the Touchwood Chair reflects designer Lars Beller Fjetland's belief that interacting with natural materials is of huge importance. Neither unnecessary decorations nor extraneous components should interrupt the simple relationship between material and user. The beechwood is molded into a continuous shape, making it contract grade durable, while preserving its flexibility. All variants of the Touchwood family stack, making them an ideal choice for public spaces or busy homes. If you perceive more than a little influence from classic minimalistic Scandinavian design at play in this hardworking, functional chair, you'd be right! An armchair, counter stool, bar stool and bar chair in a variety of wooden and metal bases, heights and finishes complete the Touchwood Family.

Upholstery
Sera
by Rohi (Germany)
94% Virgin Wool, 6% Polyamide
>122,000 Martindale
Pilling 4-5
Lightfastness 5-8
Flame resistance EN 1021: Part 1 & 2, BS 5852: Part 1 & 2 (Crib 5), US Cal. TB 117

Seat material
Beech
Fagus Sylvatica
Stained and Lacquered

Oak Veneer
Quercus Robur
Lacquered

Walnut Veneer
Juglans Nigra
Lacquered

Wood is a natural material. The color might vary from piece to piece

Leg material
Steel
Chrome (III) Plated
Powder Coated

Inside material
PU foam

Country of origin
Latvia

Tests & certifications
EN 16139:2013 – L2: Extreme use – Furniture – Strength, durability and safety – Requirements for non-domestic seating

ANSI/BIFMA X5.1-2017 American National Standard For Office Furnishings – General Purpose Office Chairs

3D model
3D files of all products are available on the product pages on hem.com

Canyon
Sera (Hem exclusive)

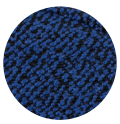

Cobalt
Sera (Hem exclusive)

Graphite
Sera (Graphit)

Calla
Sera (Calla)

Beech
Beech Veneer
Beech Core

Black
Beech Veneer
Beech Core

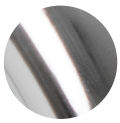

Chrome
Chrome (III) Plated Steel

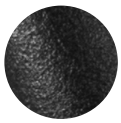

Black (RAL 9005)
Powder Coated Steel

Walnut*
Walnut Veneer
Beech Core

Oak*
Oak Veneer
Beech Core

Samples
We supply samples of our material finishes. You can order them directly from hem.com/samples

***MTO**
Reach out to your local representative for the full selection of made-to-order options.

Touchwood Bar Chair

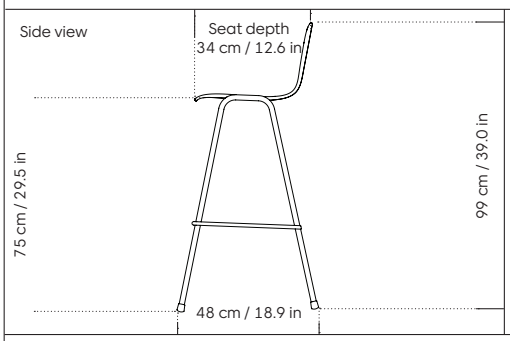

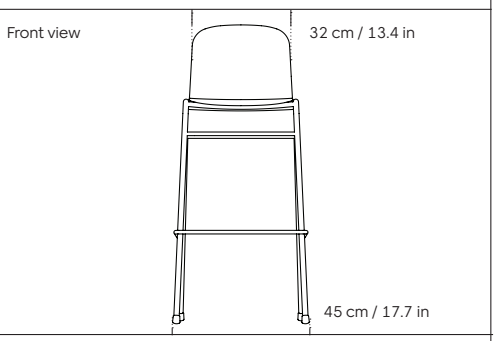

Stackability

Touchwood Bar Chair
1 – 7

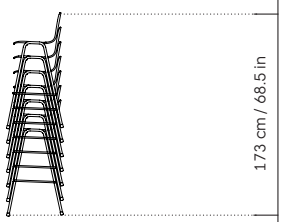

The Touchwood chairs and armchairs are compatible with straight stacking chair trolleys that have a stacking plate/arm no wider than 40cm / 15 3/4". The stacking plate/arm should provide support under the chair's stacking bars, plus vertical support for the chairs to rest on when the stack is tilted back onto the trolley wheels during transport.

Touchwood Counter Chair

Design by Lars Beller Fjetland

Subtle, strong, and elemental, the Touchwood Chair reflects designer Lars Beller Fjetland's belief that interacting with natural materials is of huge importance. Neither unnecessary decorations nor extraneous components should interrupt the simple relationship between material and user. The beechwood is molded into a continuous shape, making it contract grade durable, while preserving its flexibility. All variants of the Touchwood family stack, making them an ideal choice for public spaces or busy homes. If you perceive more than a little influence from classic minimalistic Scandinavian design at play in this hardworking, functional chair, you'd be right! An armchair, counter stool, bar stool and bar chair in a variety of wooden and metal bases, heights and finishes complete the Touchwood Family.

Upholstery
Sera
by Rohi (Germany)
94% Virgin Wool, 6% Polyamide
>122,000 Martindale
Pilling 4-5
Lightfastness 5-8
Flame resistance EN 1021: Part 1 & 2, BS 5852: Part 1 & 2 (Crib 5), US Cal. TB 117

Seat material
Beech
Fagus Sylvatica
Stained and Lacquered

Oak Veneer
Quercus Robur
Lacquered

Walnut Veneer
Juglans Nigra
Lacquered

Wood is a natural material. The color might vary from piece to piece

Leg material
Steel
Chrome (III) Plated
Powder Coated

Inside material
PU foam

Country of origin
Latvia

Tests & certifications
EN 16139:2013 – L2: Extreme use – Furniture – Strength, durability and safety – Requirements for non-domestic seating

ANSI/BIFMA X5.1-2017 American National Standard For Office Furnishings – General Purpose Office Chairs

3D model
3D files of all products are available on the product pages on hem.com

Canyon
Sera (Hem exclusive)

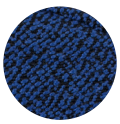

Cobalt
Sera (Hem exclusive)

Graphite
Sera (Graphit)

Calla
Sera (Calla)

Beech
Beech Veneer
Beech Core

Black
Beech Veneer
Beech Core

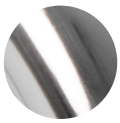

Chrome
Chrome (III) Plated Steel

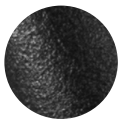

Black (RAL 9005)
Powder Coated Steel

Walnut*
Walnut Veneer
Beech Core

Oak*
Oak Veneer
Beech Core

Samples
We supply samples of our material finishes. You can order them directly from hem.com/samples

***MTO**
Reach out to your local representative for the full selection of made-to-order options.

Touchwood Counter Chair

Side view

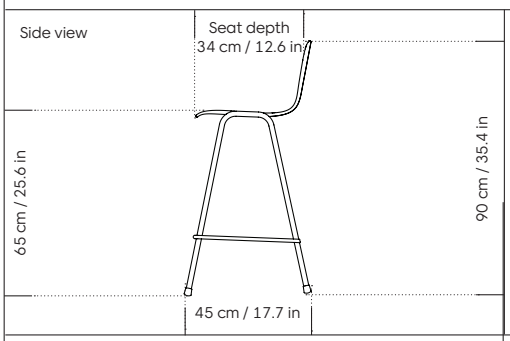

Front view

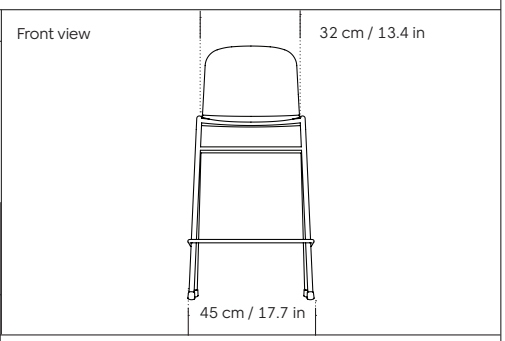

Stackability

Touchwood Counter Chair
1 – 7

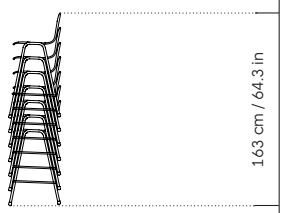

The Touchwood chairs and armchairs are compatible with straight stacking chair trolleys that have a stacking plate/arm no wider than 40cm / 15 3/4". The stacking plate/arm should provide support under the chair's stacking bars, plus vertical support for the chairs to rest on when the stack is tilted back onto the trolley wheels during transport.

Touchwood Chair

Design by Lars Beller Fjetland

Subtle, strong, and elemental, the Touchwood Chair reflects designer Lars Beller Fjetland's belief that interacting with natural materials is of huge importance. Neither unnecessary decorations nor extraneous components should interrupt the simple relationship between material and user. The beechwood is molded into a continuous shape, making it contract grade durable, while preserving its flexibility. All variants of the Touchwood family stack, making them an ideal choice for public spaces or busy homes. If you perceive more than a little influence from classic minimalistic Scandinavian design at play in this hardworking, functional chair, you'd be right! An armchair, counter stool, bar stool and bar chair in a variety of wooden and metal bases, heights and finishes complete the Touchwood Family.

Material
Beech
Fagus Sylvatica
Stained and Lacquered

Oak Veneer
Quercus Robur
Lacquered

Walnut Veneer
Juglans Nigra
Lacquered

Wood is a natural material. The color might vary from piece to piece

Country of origin
Latvia

Tests & certifications
EN 16139:2013 – L2: Extreme use – Furniture – Strength, durability and safety – Requirements for non-domestic seating

ANSI/BIFMA X5.4-2012 American National Standard for Office Furnishings – Lounge and Public Seating

3D model
3D files of all products are available on the product pages on hem.com

Beech
Beech Veneer
Beech Core

Black
Beech Veneer
Beech Core

Walnut
Walnut Veneer
Beech Core

Oak*
Oak Veneer
Beech Core

Samples
We supply samples of our material finishes. You can order them directly from hem.com/samples

***MTO**
Reach out to your local representative for the full selection of made-to-order options.

Touchwood Chair

Side view

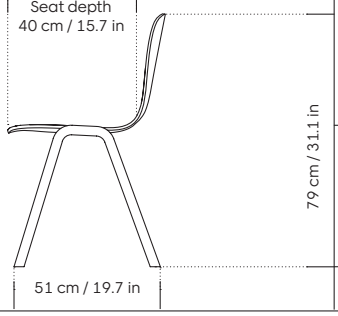

Front view

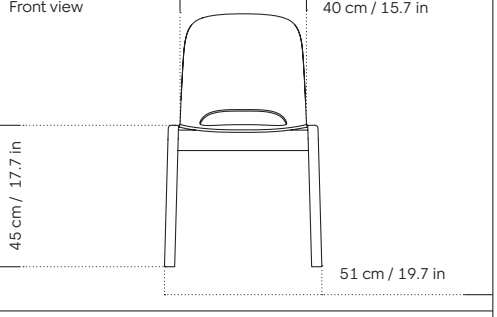

Stackability

Touchwood Chair
1 – 6

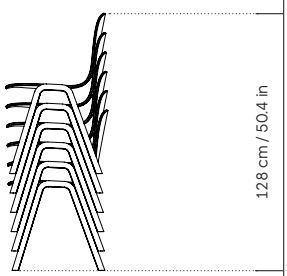

The Touchwood chairs and armchairs are compatible with straight stacking chair trolleys that have a stacking plate/arm no wider than 40cm / 15 3/4". The stacking plate/arm should provide support under the chair's stacking bars, plus vertical support for the chairs to rest on when the stack is tilted back onto the trolley wheels during transport.

Touchwood Chair

Design by Lars Beller Fjetland

Subtle, strong, and elemental, the Touchwood Chair reflects designer Lars Beller Fjetland's belief that interacting with natural materials is of huge importance. Neither unnecessary decorations nor extraneous components should interrupt the simple relationship between material and user. The beechwood is molded into a continuous shape, making it contract grade durable, while preserving its flexibility. All variants of the Touchwood family stack, making them an ideal choice for public spaces or busy homes. If you perceive more than a little influence from classic minimalistic Scandinavian design at play in this hardworking, functional chair, you'd be right! An armchair, counter stool, bar stool and bar chair in a variety of wooden and metal bases, heights and finishes complete the Touchwood Family.

Upholstery
Sera
by Rohi (Germany)
94% Virgin Wool, 6% Polyamide
>122,000 Martindale
Pilling 4-5
Lightfastness 5-8
Flame resistance EN 1021: Part 1 & 2, BS 5852: Part 1 & 2 (Crib 5), US Cal. TB 117

Seat material
Beech
Fagus Sylvatica
Stained and Lacquered

Oak Veneer
Quercus Robur
Lacquered

Walnut Veneer
Juglans Nigra
Lacquered

Wood is a natural material. The color might vary from piece to piece

Leg material
Steel
Chrome (III) Plated
Powder Coated

Inside material
PU foam

Country of origin
Latvia

Canyon
Sera (Hem exclusive)

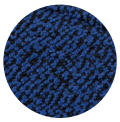

Cobalt
Sera (Hem exclusive)

Graphite
Sera (Graphit)

Calla
Sera (Calla)

Beech
Beech Veneer
Beech Core

Black
Beech Veneer
Beech Core

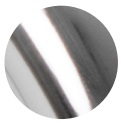

Chrome
Chrome (III) Plated Steel

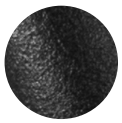

Black (RAL 9005)
Powder Coated Steel

Walnut
Walnut Veneer
Beech Core

Oak*
Oak Veneer
Beech Core

Samples
We supply samples of our material finishes. You can order them directly from hem.com/samples

***MTO**
Reach out to your local representative for the full selection of made-to-order options.

Touchwood Chair

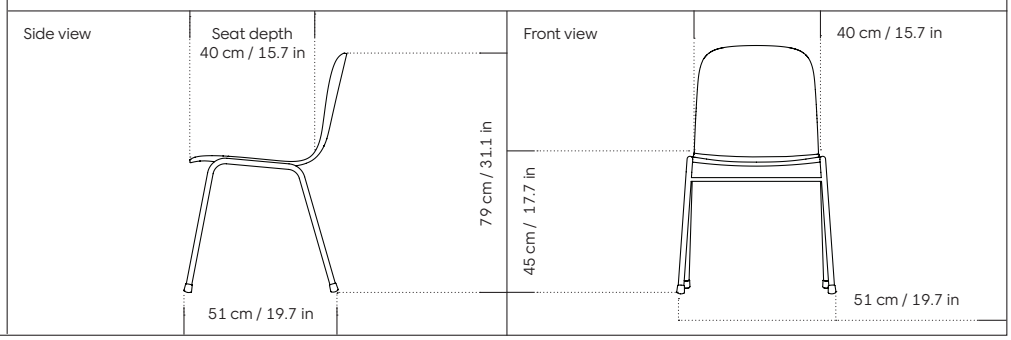

Tests & certifications	**Stackability**	
EN 16139:2013 – L2: Extreme use – Furniture – Strength, durability and safety – Requirements for non-domestic seating ANSI/BIFMA X5.4-2012 American National Standard for Office Furnishings – Lounge and Public Seating **3D model** 3D files of all products are available on the product pages on hem.com	Touchwood Chair 1 – 15 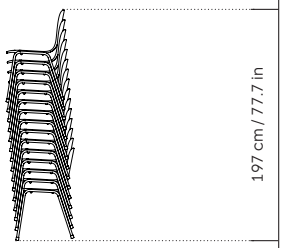 	The Touchwood chairs and armchairs are compatible with straight stacking chair trolleys that have a stacking plate/arm no wider than 40cm / 15 3/4". The stacking plate/arm should provide support under the chair's stacking bars, plus vertical support for the chairs to rest on when the stack is tilted back onto the trolley wheels during transport.

Udon Chair

Design by Staffan Holm

Udon is effortlessly charming—a seemingly simple chair. In reality, a huge amount of skill underlies this contemporary classic's form. Designer Staffan Holm took inspiration from archetypal bentwood chairs and borrowed traditional Japanese carpentry traditions, and used just a few simple joints to maintain a clean line and open structure. Colored wood stains accentuate a lively wood grain, and a generous seat promises a comfortable sit. The Udon Chair Upholstered features the highest-quality Scandinavian leather, adding yet another layer of comfort and elegance.

Leg material
Beech
Fagus Sylvatica
Stained and Lacquered

Wood is a natural material. The color might vary from piece to piece

Upholstery
Elmosoft Leather
by Elmo (Sweden)
Scandinavian Grain Leather, Semi-aniline

Inside material
PU foam

Country of origin
Latvia

Tests & certifications
EN 16139:2013 – L1: General Use – Furniture – Strength, durability and safety – Requirements for non-domestic seating

3D model
3D files of all products are available on the product pages on hem.com

Natural
Beech

Black
Beech

Black
Elmosoft Leather (99999)

Cognac
Elmosoft Leather (54035)

Samples
We supply samples of our material finishes. You can order them directly from hem.com/samples

MTO
Please refer to the price list or reach out to your local representative for our made-to-order options

Udon Chair

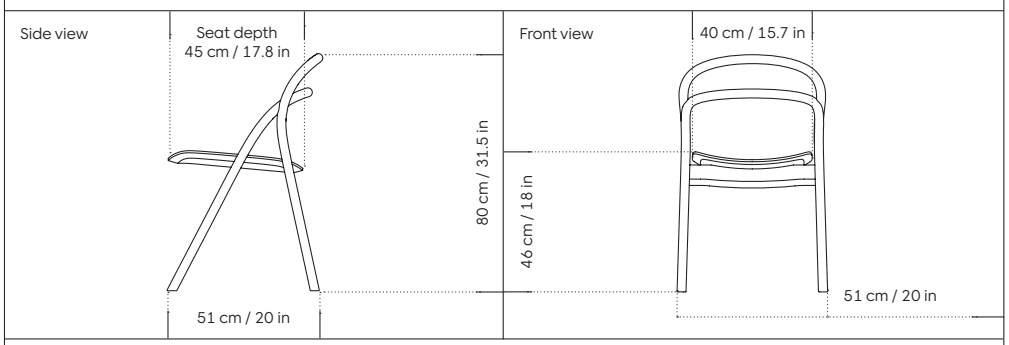

Udon Chair Upholstered

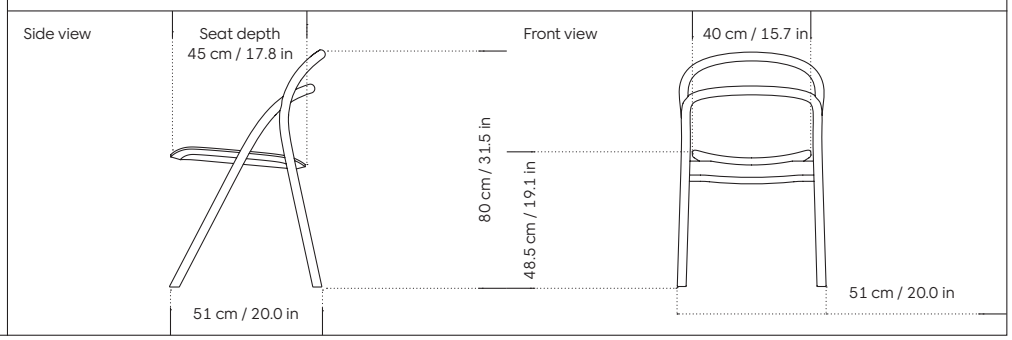

Sofas

Poufs

We are a little obsessive about the quality of our upholstered furniture. Our sofas and poufs are designed with ingenuity, built to last, and easy to assemble, plus they can grow and evolve with you. They are comfort personified.

Boa Pouf

Design by Sabine Marcelis

The donut-shaped Boa Pouf by Sabine Marcelis is perfectly sculptural; a bold graphic form that interrupts interior landscapes with its faultless chunky geometry. This piece of upholstered occasional furniture is rounded and soft, encased in a seamless outer layer that gives it an air-brushed finish: The smooth shape-knit textile that covers the Boa Pouf is a milestone in technologically innovative furniture making. Boa Pouf is as perfect for perching on, propping up feet, lounging against, as it is for making a sculptural statement and is the ideal expression of designer Sabine Marcelis, whose work is characterised by resonating clear, single, notes of absolute material, textile and colour.

Upholstery
Hem exclusive
by Kobleder (Austria)
80% Wool, 20% Nylon
>100,000 Martindale
Pilling 2-3
Lightfastness 5-6
Flame resistance EN 1021: Part 1 & 2, BS 5852: Part 1, US Cal. TB 117

Inside material
PU foam
Wooden Structure

Country of origin
Poland

3D model
3D files of all products are available on the product pages on hem.com

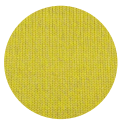

Sulfur Yellow
(Hem exclusive)

Cotton Candy
(Hem exclusive)

Oatmeal
(Hem exclusive)

Pine Green
(Hem exclusive)

Samples
We supply samples of our material finishes. You can order them directly from hem.com/samples

Boa Pouf

Top view

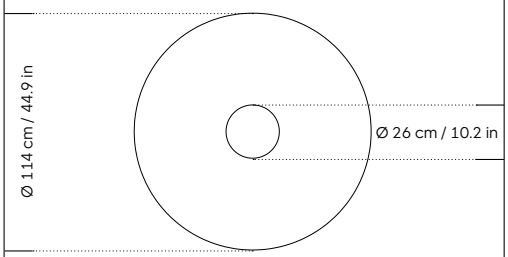

Side view

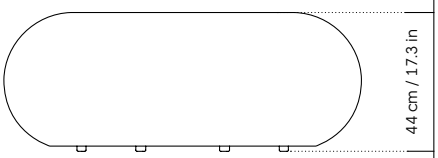

Bon Pouf Round

Design by Hem

The Bon Pouf is ideal for perching upon or supporting tired feet; keep it on hand for any number of uses as an occasional seat, prop, or table. These versatile upholstered ottomans work equally well solo, as a single splash of color and softness, or in a gaggle. A mixed group of Bon Poufs in various sizes creates an interesting landscape of softness across any space. Select a shape that works for you, then choose your upholstery pattern and color (we often make smart reuse of textile offcuts here) to begin your collection.

Upholstery
Razzle Dazzle
by Kvadrat (Netherlands)
60% New wool, 20% Nylon, 20% Polyester
>100,000 Martindale
Pilling 4
Lightfastness 6
Flame resistance EN 1021: Part 1 & 2, BS 5852: Part 1, US Cal. TB 117

Uniform Mélange
by Kvadrat (Netherlands)
68% New wool, 22% Nylon, 10% Polyester
100,000 Martindale
Pilling 4
Lightfastness 6
Flame resistance EN 1021: Part 1 & 2, BS 5852: Part 1, US Cal. TB 117

Bute Storr
by Bute Fabrics (Scotland)
97 % Pure New Wool, 3% Nylon
65,000 Martindale
Lightfastness 5
Flame resistance IMO FTP Code(2010) Annex 1, Part 8, BS 5852: Part 1 & 2 (Crib 5), US Cal. TB 121

Gentle 2
by Kvadrat (Netherlands)
60% New wool, 20% Nylon, 20% Polyester
90,000 Martindale
Pilling 4-5
Lightfastness 6-7
Flame resistance EN 1021: Part 1 & 2, BS 5852: Part 1, US Cal. TB 117

Inside material
PU foam
Wooden structure

Country of origin
Lithuania

3D model
3D files of all products are available on the product pages on hem.com

Blossom
Razzle Dazzle (0636)

Ginger
Razzle Dazzle (0466)

Flame
Razzle Dazzle (0556)

Honey
Razzle Dazzle (0436)

Shell
Uniform Mélange (0103)

Ink
Uniform Mélange (0793)

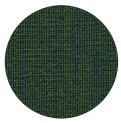

Peacock
Uniform Mélange (0983)

Eggshell
Bute Storr Eggshell

Sawdust
Bute Storr Sawdust

Pebble
Bute Storr Pebble

Rust Red
Gentle 2 (0373)

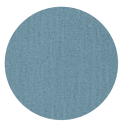

Light Blue
Gentle 2 (0733)

Red
Gentle 2 (0553)

Ochre
Gentle 2 (0442)

Blue
Gentle 2 (0753)

Samples
We supply samples of our material finishes. You can order them directly from hem.com/samples

Graded-in Textile and Made-To-Order
Reach out to your local representative for the full selection of made-to-order options.

Bon Pouf Round

Top view

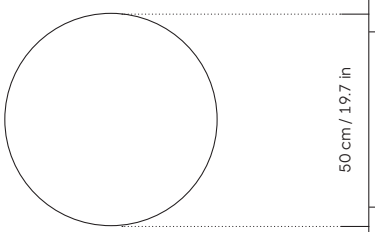

Side view

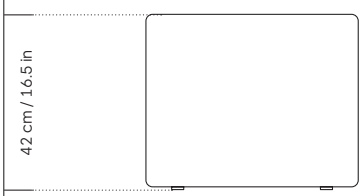

Great Sofa - Product Details

Design by Philippe Malouin

The Great Sofa lives up to its monumental name. Great in scale; more landscape than furniture, an expansive archipelago of soft upholstery upon which to retreat. Great in looks; the sofa broadcasts its relaxez-vous informality with loose-fit covers that adapt to your body, crumple and cosset - nothing is uptight or rigid about Great Sofa. Great Sofa excels in concept too; easy-to-fit-and-remove covers aid effortless cleaning and offer longevity. No tools are needed for assembly. Plus, our modular system facilitates endless configurations for laidback, feet-up luxury. Corners, islands, conversation pits welcome.

Upholstery
Cifrado
by Kvadrat/Sahco (Denmark)
42% recycled polyester, 27% viscose, 24% recycled cotton, 7% linen
30,000 Martindale
Pilling 5
Lightfastness 5-6
Flame resistance EN 1021: Part 1 & 2, US Cal. TB 117-2013, IMO 2010 FTP Code Part 8

Safire
by Kvadrat/Sahco (Denmark)
43% viscose, 17% polyacrylic, 15% new wool, 9% cotton, 8% polyester, 8% linen
40,000 Martindale
Pilling 3
Lightfastness 5-6
Flame resistance BS 5852: Part 1, EN 1021: Part 1 & 2, US Cal. TB 117-2013, IMO 2010 FTP Code Part 8

Autumn
by Kvadrat (Denmark)
100% Recycled Polyester
50,000 Martindale
Pilling 4-5
Lightfastness 6-7
Flame resistance ASTM E 84 Adhered, ASTM E84 Class A Unadhered, EN 1021: Part 1 & 2, IMO 2010 FTP Code Part 8, US Cal. TB 117-2013

Leg material
Birch wood
Painted

Inside material
PU foam
Wooden structure

Country of origin
Lithuania

Tests & certifications
EN 16139:2013 – L2: Extreme use – Furniture Strength, durability and safety – Requirements for non-domestic

Product accessory
Great Cushion

3D model
3D files of all products are available on the product pages on hem.com

Cifrado
0381

Cifrado
0111

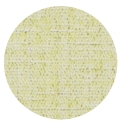
Cifrado
0901

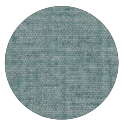
Cifrado
0741

Safire
0003

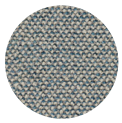
Safire
0012

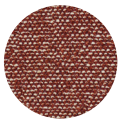
Safire
0013

Safire
0014

Safire
0007

Autumn
0131

Autumn
0221

Autumn
0331

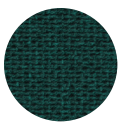
Autumn
0971

Autumn
0361

Samples
We supply samples of our material finishes. You can order them directly from hem.com/samples

Graded-in Textile and Made-To-Order
Reach out to your local representative for the full selection of made-to-order options.

Great Sofa Ottoman

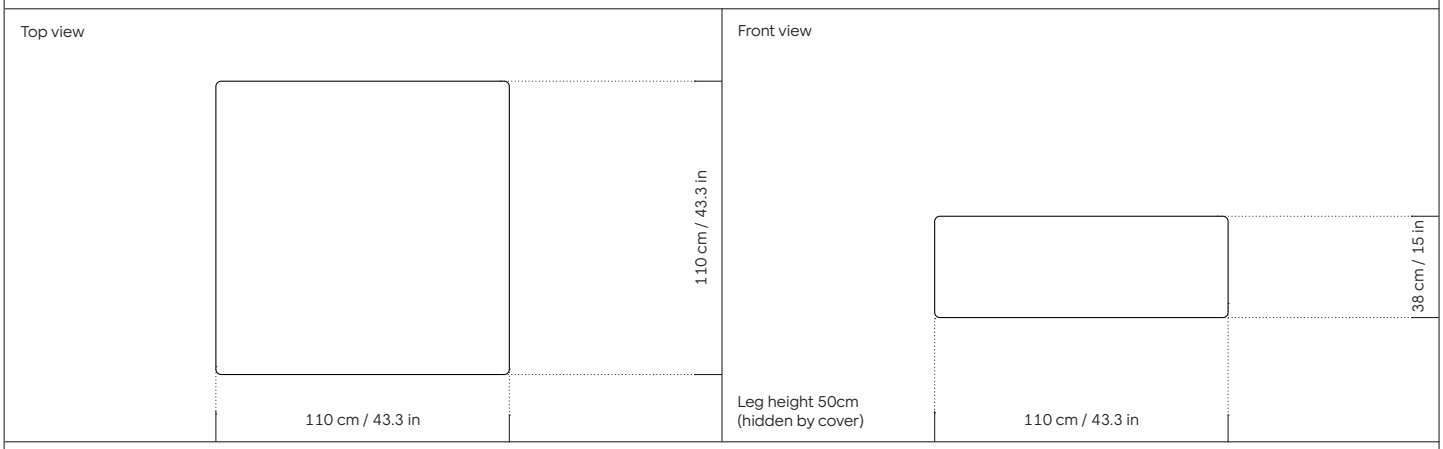

Great Sofa Extension Module

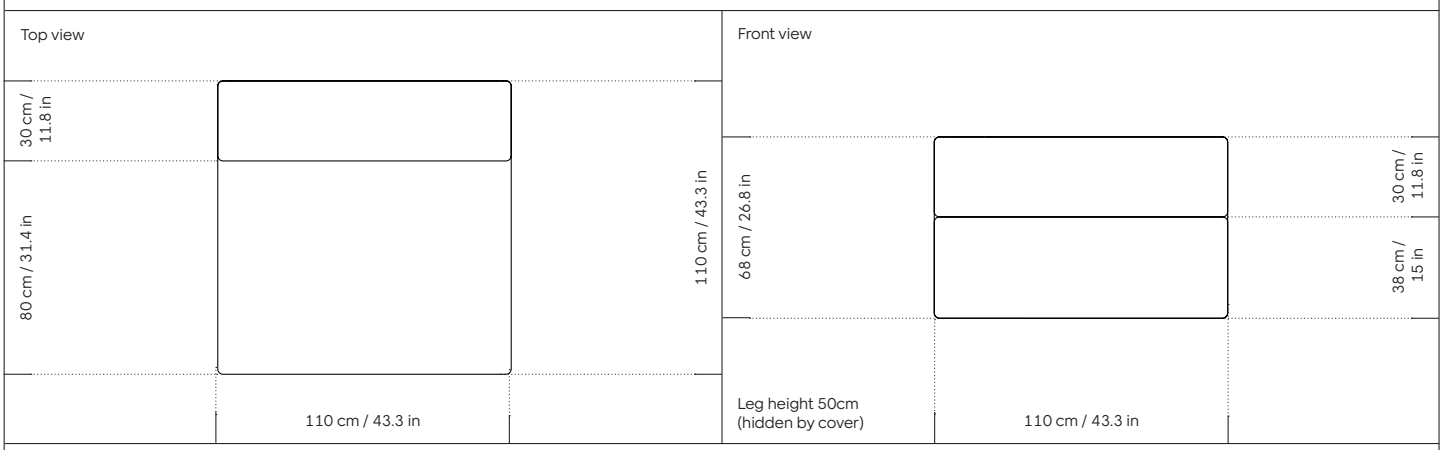

Great Sofa Extension Module Narrow

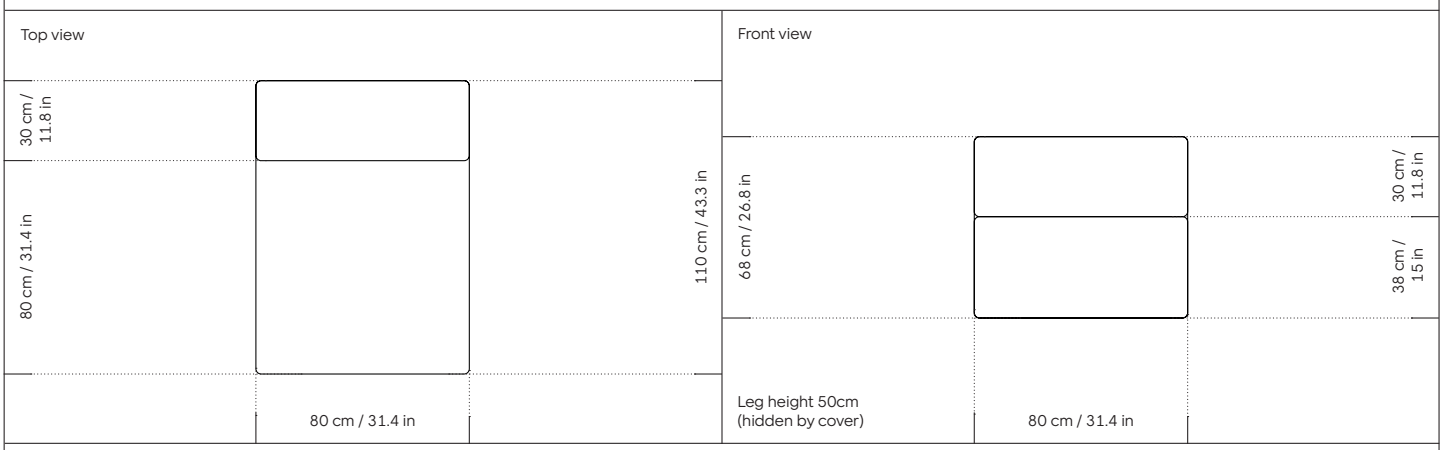

Great Sofa Corner Module

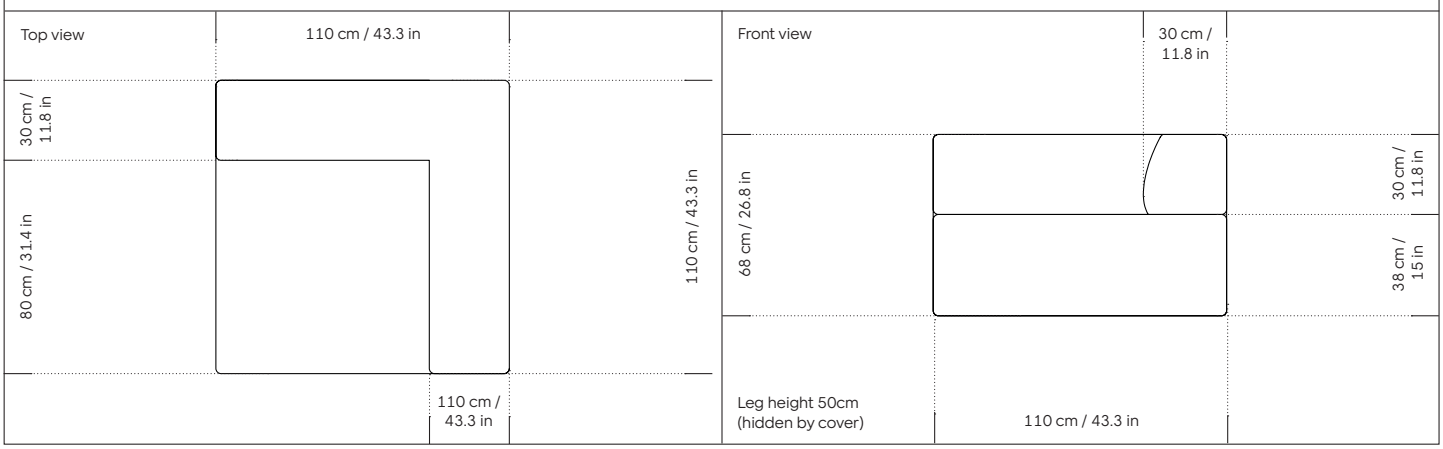

Great Sofa - Variant Overview

This is a modular product that can be configured freely to fit your needs. All variants consist of either the Great Sofa Corner Module, Great Sofa Extension Module, Great Sofa Extension Module Narrow or Great Sofa Ottoman.
For custom configurations reach out to info@hem.com for assistance.

Great Sofa Ottoman

Great Sofa Extension Module

Great Sofa Extension Module Narrow

Great Sofa Corner Module

Great 2-seater Sofa

Great 3-seater Sofa

Great 3-seater Sofa Narrow

Great 3-seater Sofa Corner Right

Great 3-seater Sofa Corner Left

Great 3-seater Sofa Chaise Right

Great 3-seater Sofa Chaise Left

Great 3-seater Sofa Narrow Corner Right

Great 3-seater Sofa Narrow Corner Left

Great 3-Seater Sofa Narrow Chaise Right

Great 3-seater Sofa Narrow Chaise Left

Koti 2-Seater Sofa

Design by Form Us With Love

Sheer, unadulterated comfort lies at the heart of the Koti Sofa. From the super-soft cushions that you sink into, to the downy armrests that are as comfortable as pillows, to the chunky bouclé or subtle virgin wool upholsteries, design studio Form Us With Love was obsessed with making it a relaxed sofa for relaxed living. Taking its name from the Finnish word for "home," the Koti Sofa was always intended to be a sanctuary.

Upholstery
Bute Storr
by Bute Fabrics (Scotland)
97 % Pure New Wool, 3% Nylon
65000 Martindale
Lightfastness 5
Flame resistance IMO FTP Code(2010) Annex 1, Part 8, BS 5852: Part 1 & 2 (Crib 5), US Cal. TB 121

Sera
by Rohi (Germany)
94% Virgin Wool, 6% Polyamide
122,000 Martindale
Pilling 4-5; Lightfastness 5-8
Flame resistance EN 1021: Part 1 & 2, BS 5852: Part 1 & 2 (Crib 5), US Cal. TB 117-2013

Autumn
by Kvadrat (Denmark)
100% Recycled Polyester
50,000 Martindale
Pilling 4-5
Lightfastness 6-7
Flame resistance ASTM E 84 Adhered, ASTM E84 Class A Unadhered, EN 1021: Part 1 & 2, IMO 2010 FTP Code Part 8, US Cal. TB 117-2013

Legs material
Steel
Powder Coated

Solid Oak
Quercus Robur
Clear Lacquered

Wood is a natural material. The color might vary from piece to piece

Inside material
PU foam
Wooden structure

Country of origin
Lithuania

3D model
3D files of all products are available on the product pages on hem.com

Eggshell
Bute Storr

Sawdust
Bute Storr

Pebble
Bute Storr

Sand
Sera

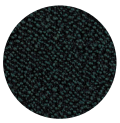

Pine
Sera (Hem exclusive)

Rosewood
Sera

0361
Autumn

0221
Autumn

Oak
Solid Oak

Samples
We supply samples of our material finishes. You can order them directly from hem.com/samples

Graded-in Textile and Made-To-Order
Reach out to your local representative for the full selection of made-to-order options.

Koti 2-Seater Sofa

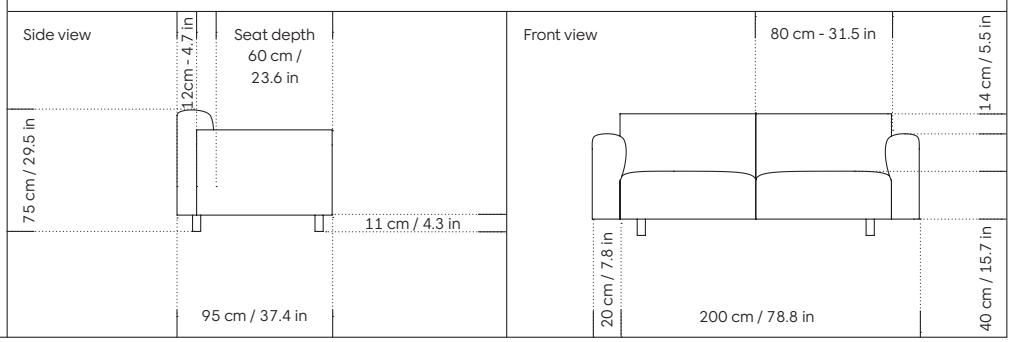

Koti 3-Seater Sofa

Design by Form Us With Love

Sheer, unadulterated comfort lies at the heart of the Koti Sofa. From the super-soft cushions that you sink into, to the downy armrests that are as comfortable as pillows, to the chunky bouclé or subtle virgin wool upholsteries, design studio Form Us With Love was obsessed with making it a relaxed sofa for relaxed living. Taking its name from the Finnish word for "home," the Koti Sofa was always intended to be a sanctuary.

Upholstery
Bute Storr
by Bute Fabrics (Scotland)
97 % Pure New Wool, 3% Nylon
65000 Martindale
Lightfastness 5
Flame resistance IMO FTP Code(2010) Annex 1, Part 8, BS 5852: Part 1 & 2 (Crib 5), US Cal. TB 121

Sera
by Rohi (Germany)
94% Virgin Wool, 6% Polyamide
122,000 Martindale
Pilling 4-5; Lightfastness 5-8
Flame resistance EN 1021: Part 1 & 2, BS 5852: Part 1 & 2 (Crib 5), US Cal. TB 117-2013

Autumn
by Kvadrat (Denmark)
100% Recycled Polyester
50,000 Martindale
Pilling 4-5
Lightfastness 6-7
Flame resistance ASTM E 84 Adhered, ASTM E84 Class A Unadhered, EN 1021: Part 1 & 2, IMO 2010 FTP Code Part 8, US Cal. TB 117-2013

Legs material
Steel
Powder Coated

Solid Oak
Quercus Robur
Clear Lacquered

Wood is a natural material. The color might vary from piece to piece

Inside material
PU foam
Wooden structure

Country of origin
Lithuania

3D model
3D files of all products are available on the product pages on hem.com

Eggshell
Bute Storr

Sawdust
Bute Storr

Pebble
Bute Storr

Sand
Sera

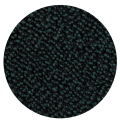

Pine
Sera (Hem exclusive)

Rosewood
Sera

0361
Autumn

0221
Autumn

Oak
Solid Oak

Samples
We supply samples of our material finishes. You can order them directly from hem.com/samples

Graded-in Textile and Made-To-Order
Reach out to your local representative for the full selection of made-to-order options.

Koti 3-Seater Sofa

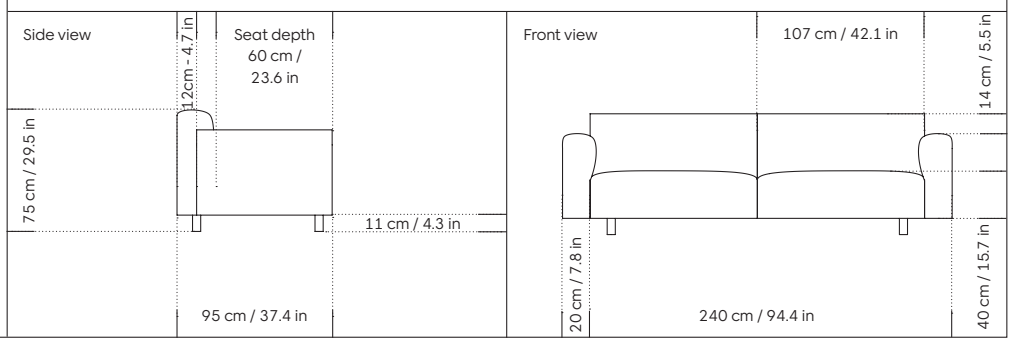

Kumo Sofa with Armrests

Design by Anderssen & Voll

The Kumo Sofa system is built around an innovative metal frame onto which individual cushion components are added. This intelligent design from Anderssen & Voll makes it especially convenient to live with—readily reconfigurable whenever and however you wish. The Kumo Sofa is also efficient and responsible to ship thanks to the same quality: it dismantles easily. Like its namesake—Kumo means “cloud” in Japanese—this sofa is light and soft as well as clever, with generous, foam-filled cushions covered in a luxurious, highly textured woolen fabric as a final flourish.

Upholstery
Sera
by Rohi (Germany)
94% Virgin Wool, 6% Polyamide
>122,000 Martindale
Pilling 4-5
Lightfastness 5-8
Flame resistance EN 1021: Part 1 & 2, BS 5852: Part 1 & 2 (Crib 5), US Cal. TB 117

Leg material
Steel
Powder Coated

Inside material
PU foam
Steel structure

Country of origin
Lithuania

Tests & certifications
EN 16139:2013 – L2: Extreme use – Furniture – Strength, durability and safety – Requirements for non-domestic seating

3D model
3D files of all products are available on the product pages on hem.com

Canyon
Sera (Hem exclusive)

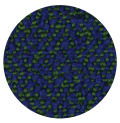

Mare
Sera (Mare)

Graphite
Sera (Graphit)

Porcelain
Sera (Porcelain)

Pine
Sera (Pine)

Rosewood
Sera

Black (RAL 9005)
Powder Coated Steel

Samples
We supply samples of our material finishes. You can order them directly from hem.com/samples

Graded-in Textile and Made-To-Order
Reach out to your local representative for the full selection of made-to-order options.

Kumo Sofa with Armrests

Side view

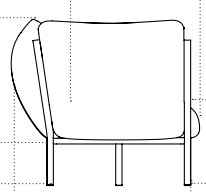

Modularity
This is a modular product that can be configured freely to fit your needs. Reach out to info@hem.com for assistance

Kumo 2-seater Sofa with Armrests

Front view

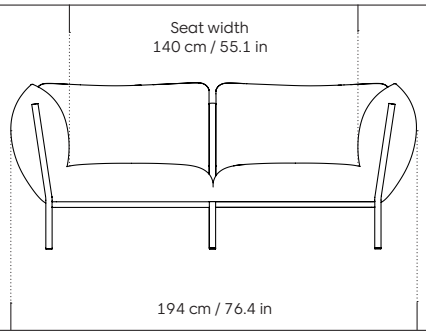

Kumo 3-seater Sofa with Armrests

Front view

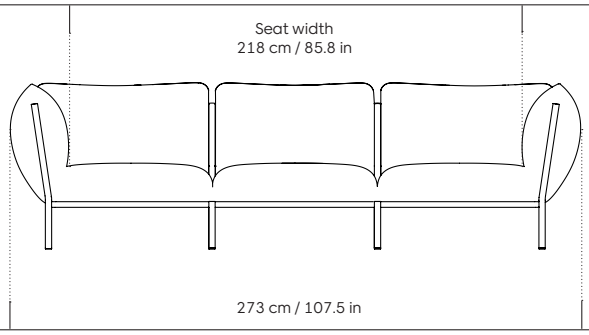

Kumo 4-seater Sofa with Armrests

Front view

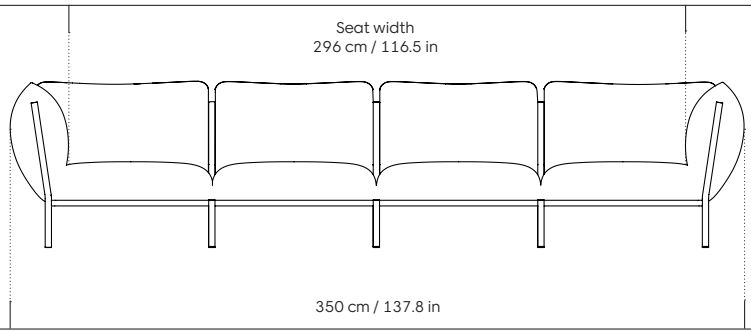

Kumo Sofa

Design by Anderssen & Voll

The Kumo Sofa system is built around an innovative metal frame onto which individual cushion components are added. This intelligent design from Anderssen & Voll makes it especially convenient to live with—readily reconfigurable whenever and however you wish. The Kumo Sofa is also efficient and responsible to ship thanks to the same quality: it dismantles easily. Like its namesake—Kumo means "cloud" in Japanese—this sofa is light and soft as well as clever, with generous, foam-filled cushions covered in a luxurious, highly textured woolen fabric as a final flourish.

Upholstery
Sera
by Rohi (Germany)
94% Virgin Wool, 6% Polyamide
>122,000 Martindale
Pilling 4-5
Lightfastness 5-8
Flame resistance EN 1021: Part 1 & 2, BS 5852: Part 1 & 2 (Crib 5), US Cal. TB 117

Leg material
Steel
Powder Coated

Inside material
PU foam
Steel structure

Country of origin
Lithuania

Tests & certifications
EN 16139:2013 – L2: Extreme use – Furniture – Strength, durability and safety – Requirements for non-domestic seating

3D model
3D files of all products are available on the product pages on hem.com

Canyon
Sera (Hem exclusive)

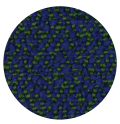

Mare
Sera (Mare)

Graphite
Sera (Graphit)

Porcelain
Sera (Porcelain)

Pine
Sera (Pine)

Rosewood
Sera

Black (RAL 9005)
Powder Coated Steel

Samples
We supply samples of our material finishes. You can order them directly from hem.com/samples

Graded-in Textile and Made-To-Order
Reach out to your local representative for the full selection of made-to-order options.

Kumo Sofa

Side view

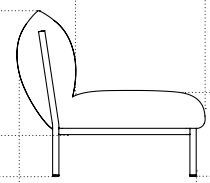

Modularity
This is a modular product that can be configured freely to fit your needs. Reach out to info@hem.com for assistance

Kumo Single-seater

Front view

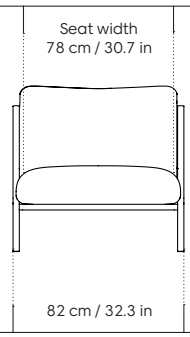

Kumo 2-seater Sofa

Front view

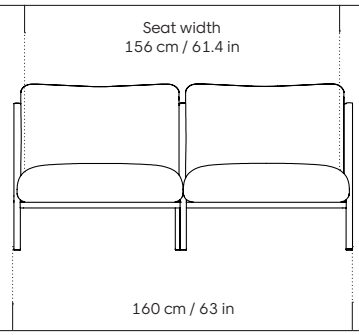

Kumo 3-seater Sofa

Front view

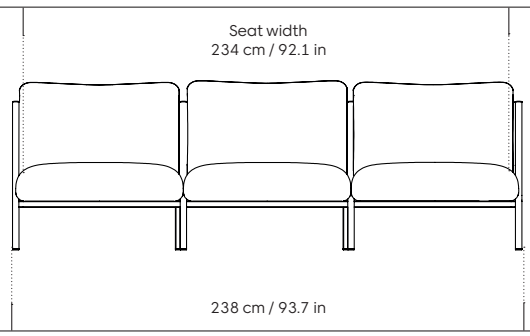

Kumo 4-seater Sofa

Front view

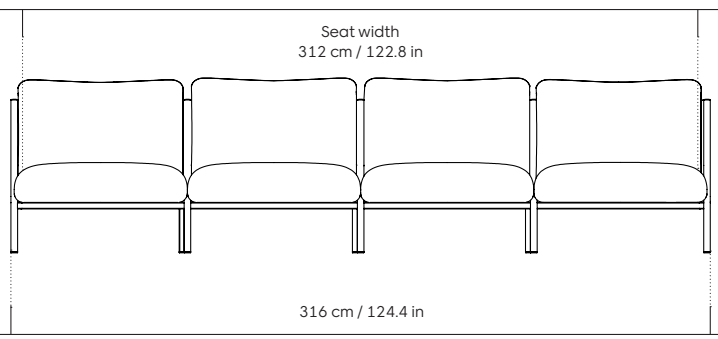

Kumo Corner Sofa with Armrest

Design by Anderssen & Voll

The Kumo Sofa system is built around an innovative metal frame onto which individual cushion components are added. This intelligent design from Anderssen & Voll makes it especially convenient to live with—readily reconfigurable whenever and however you wish. The Kumo Sofa is also efficient and responsible to ship thanks to the same quality: it dismantles easily. Like its namesake—Kumo means "cloud" in Japanese—this sofa is light and soft as well as clever, with generous, foam-filled cushions covered in a luxurious, highly textured woolen fabric as a final flourish.

Upholstery
Sera
by Rohi (Germany)
94% Virgin Wool, 6% Polyamide
>122,000 Martindale
Pilling 4-5
Lightfastness 5-8
Flame resistance EN 1021: Part 1 & 2, BS 5852: Part 1 & 2 (Crib 5), US Cal. TB 117

Leg material
Steel
Powder Coated

Inside material
PU foam
Steel structure

Country of origin
Lithuania

Tests & certifications
EN 16139:2013 – L2: Extreme use – Furniture – Strength, durability and safety – Requirements for non-domestic seating

3D model
3D files of all products are available on the product pages on hem.com

Canyon
Sera (Hem exclusive)

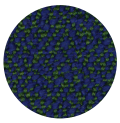

Mare
Sera (Mare)

Graphite
Sera (Graphit)

Porcelain
Sera (Porcelain)

Pine
Sera (Pine)

Rosewood
Sera

Black (RAL 9005)
Powder Coated Steel

Samples
We supply samples of our material finishes. You can order them directly from hem.com/samples

Graded-in Textile and Made-To-Order
Reach out to your local representative for the full selection of made-to-order options.

Kumo Corner Sofa Left with Armrest

Side view

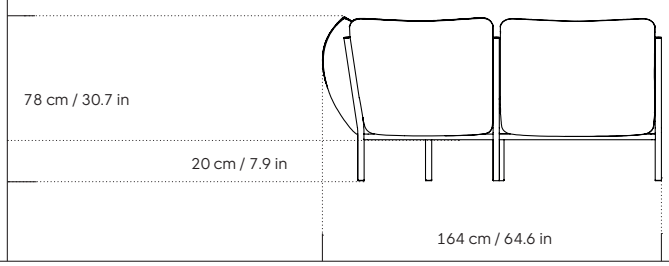

Modularity
This is a modular product that can be configured freely to fit your needs. Reach out to info@hem.com for assistance

Kumo Corner Sofa Left with Armrest

Front view

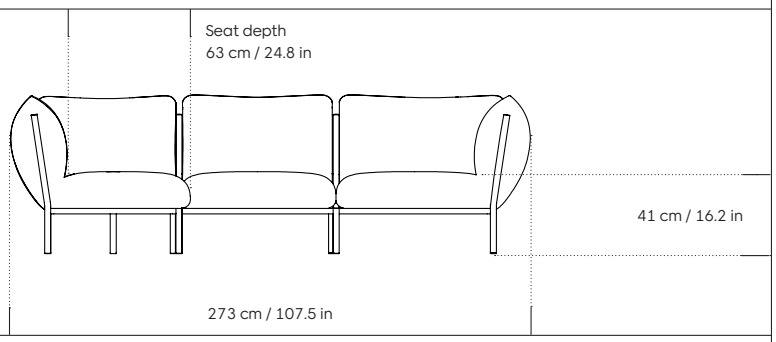

Kumo Corner Sofa Left with Armrest

Top view

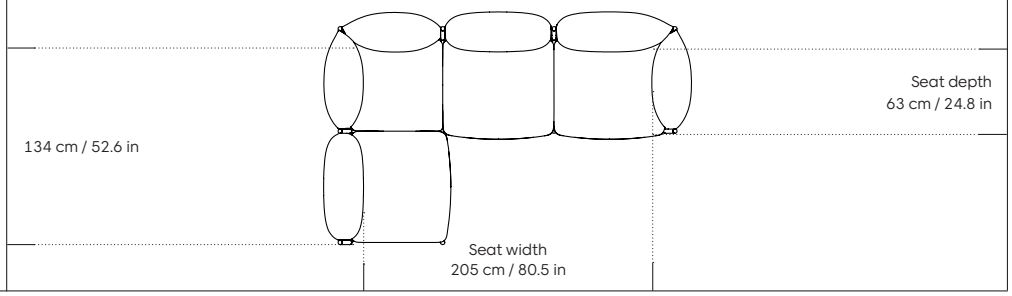

Kumo Corner Sofa

Design by Anderssen & Voll

The Kumo Sofa system is built around an innovative metal frame onto which individual cushion components are added. This intelligent design from Anderssen & Voll makes it especially convenient to live with—readily reconfigurable whenever and however you wish. The Kumo Sofa is also efficient and responsible to ship thanks to the same quality: it dismantles easily. Like its namesake—Kumo means “cloud” in Japanese—this sofa is light and soft as well as clever, with generous, foam-filled cushions covered in a luxurious, highly textured woolen fabric as a final flourish.

Upholstery
Sera
by Rohi (Germany)
94% Virgin Wool, 6% Polyamide
>122,000 Martindale
Pilling 4-5
Lightfastness 5-8
Flame resistance EN 1021: Part 1 & 2, BS 5852: Part 1 & 2 (Crib 5), US Cal. TB 117

Leg material
Steel
Powder Coated

Inside material
PU foam
Steel structure

Country of origin
Lithuania

Tests & certifications
EN 16139:2013 – L2: Extreme use – Furniture – Strength, durability and safety – Requirements for non-domestic seating

3D model
3D files of all products are available on the product pages on hem.com

Canyon
Sera (Hem exclusive)

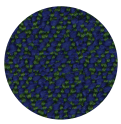

Mare
Sera (Mare)

Graphite
Sera (Graphit)

Porcelain
Sera (Porcelain)

Pine
Sera (Pine)

Rosewood
Sera

Black (RAL 9005)
Powder Coated Steel

Samples
We supply samples of our material finishes. You can order them directly from hem.com/samples

Graded-in Textile and Made-To-Order
Reach out to your local representative for the full selection of made-to-order options.

Kumo Corner Sofa Left

Side view

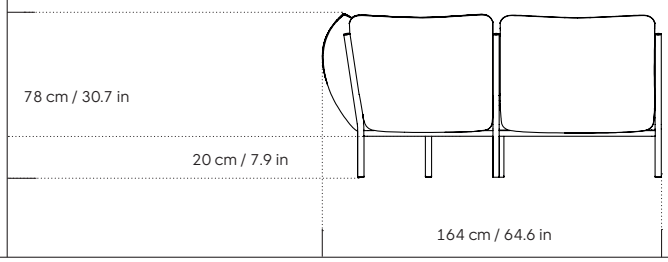

Modularity
This is a modular product that can be configured freely to fit your needs. Reach out to info@hem.com for assistance

Kumo Corner Sofa Left

Front view

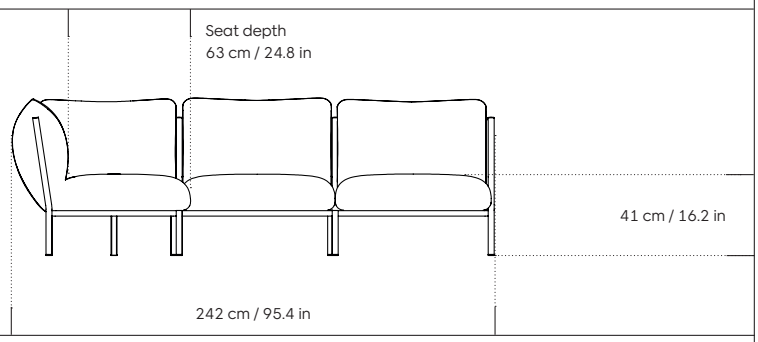

Kumo Corner Sofa Left

Top view

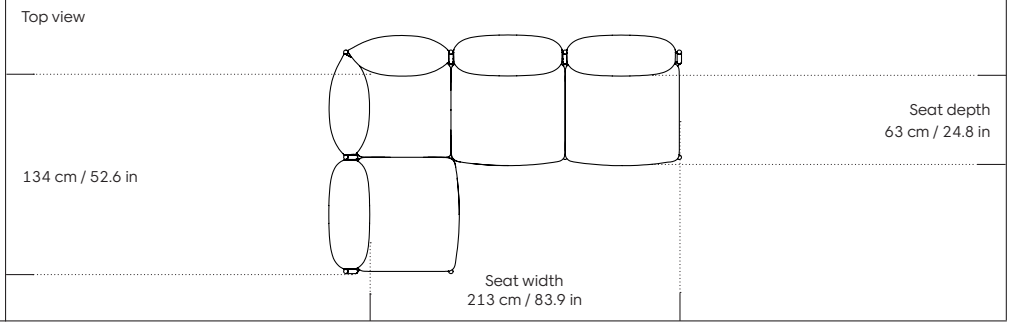

Palma Pouf Small

Design by Kusheda Mensah

A Palma Pouf upgrades any space. Graphic, arresting, refreshingly carefree, these elegant upholstered seats bring visual interest and facilitate interaction wherever they are used. Casual and unorthodox seating encourages constructive and thoughtful communication, observes designer Kusheda Mensah. Her Palma Poufs series for Hem consists of three decorative shapes made from a solid base and a soft but sturdy upper. Use them as focal points, disrupt a traditional seating arrangement or playfully juxtapose shape and texture with a single pouf. Encourage perching, parking, lounging. Palma Poufs are available in a wide range of finishes for supreme mix or match options.

Product name	Finish	SKU	Product name	Finish	SKU
Palma Pouf Small	Elmosoft 03009*	92731	**Palma Pouf Small**	Steelcut 3 0190*	92716
	Elmosoft 54035*	92729		Steelcut 3 0240*	92715
	Elmosoft 98015*	92732		Steelcut 3 0265*	95926
	Elmosoft 99999*	92730		Steelcut 3 0655*	95933
	Gentle 0193*	92723		Steelcut 3 0682*	92717
	Gentle 0373*	92722		Steelcut 3 0975	31576
	Gentle 0443*	92721		Storr 0612	31575
	Gentle 0553*	92718		Storr 1501*	95935
	Gentle 0733*	92720		Storr 3405*	95936
	Gentle 0753*	92719			
	Loop Loop 002*	92726			
	Loop Loop 003*	92724			
	Loop Loop 004*	92728			
	Loop Loop 005*	92725			
	Loop Loop 006*	92727			

Upholstery

Elmosoft Leather
by Elmo (Sweden)
Scandinavian Grain Leather, Semi-aniline
Lightfastness 6

Gentle 2
by Kvadrat (Netherlands)
60% New wool, 20% Nylon, 20% Polyester
90,000 Martindale
Pilling 4-5
Lightfastness 6-7
Flame resistance EN 1021: Part 1 & 2, BS 5852: Part 1, US Cal. TB 117

Loop Loop
by Dedar (Italy)
28% Polyester, 25% Acrylic, 24% Wool, 23% Recycled Cotton
52,000 Martindale
Pilling 4-5
Lightfastness 4-5
Flame resistance US Cal. TB 117-2013, UK BS5852 CIGAR. TEST

Steelcut 3
by Kvadrat (Netherlands)
90% New Wool, worsted 10% Nylon
100,000 Martindale
Pilling 3-4
Lightfastness 6
Flame resistance EN 1021: Part 1 & 2, US Cal. TB 117-2013, BS 5852: Part 1, UNI 9175 1IM

Bute Storr
by Bute Fabrics (Scotland)
97 % Pure New Wool, 3% Nylon
65,000 Martindale
Lightfastness 5
Flame resistance IMO FTP Code(2010) Annex 1, Part 8, BS 5852: Part 1 & 2 (Crib 5), US Cal. TB 121

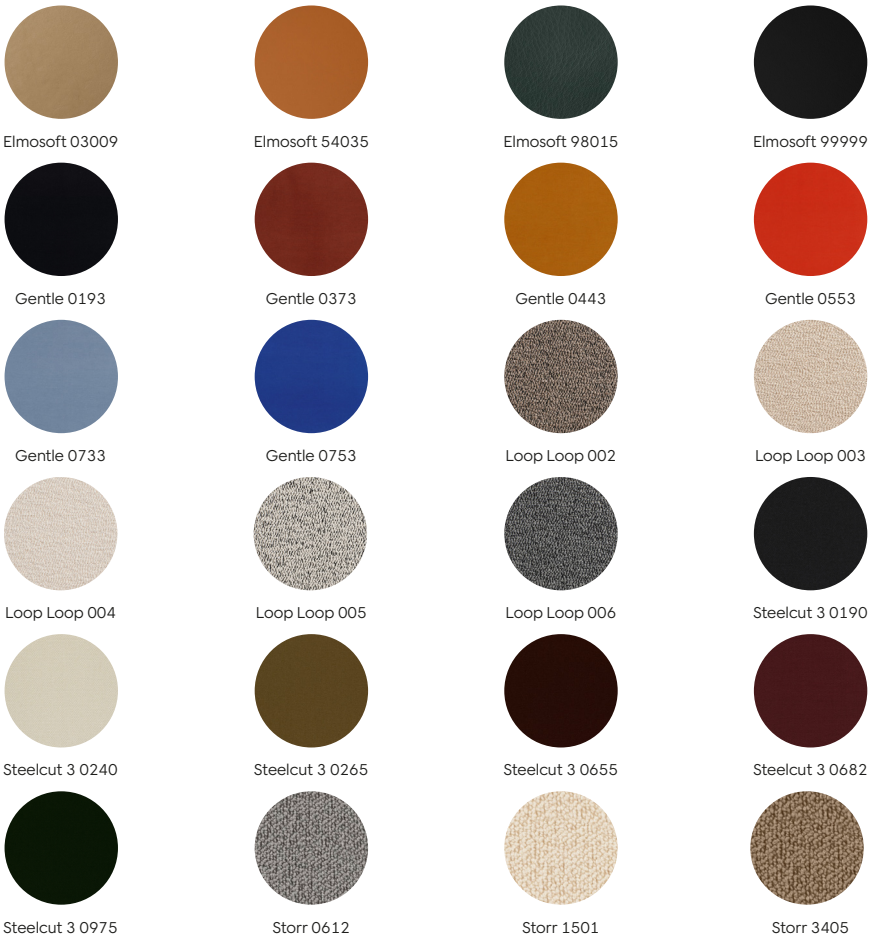

Samples
We supply samples of our material finishes. You can order them directly from hem.com/samples

***MTO**
Reach out to your local representative for the full selection of made-to-order options.

Inside material
PU Foam
Plywood Structure

Country of origin
Poland / Lithuania

3D model
3D files of all products are available on the product pages on hem.com

Palma Pouf Small

Top view

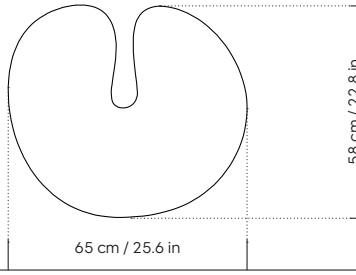

Side view

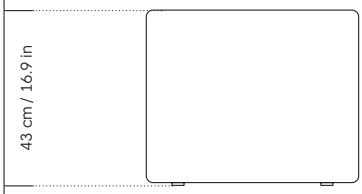

Palma Pouf Medium

Design by Kusheda Mensah

A Palma Pouf upgrades any space. Graphic, arresting, refreshingly carefree, these elegant upholstered seats bring visual interest and facilitate interaction wherever they are used. Casual and unorthodox seating encourages constructive and thoughtful communication, observes designer Kusheda Mensah. Her Palma Poufs series for Hem consists of three decorative shapes made from a solid base and a soft but sturdy upper. Use them as focal points, disrupt a traditional seating arrangement or playfully juxtapose shape and texture with a single pouf. Encourage perching, parking, lounging. Palma Poufs are available in a wide range of finishes for supreme mix or match options.

Product name	Finish	SKU	Product name	Finish	SKU
Palma Pouf Medium	Elmosoft 03009*	92695	**Palma Pouf Medium**	Steelcut 3 0190*	92680
	Elmosoft 54035*	92693		Steelcut 3 0240*	92679
	Elmosoft 98015*	92696		Steelcut 3 0265*	31573
	Elmosoft 99999*	92694		Steelcut 3 0655*	95929
	Gentle 0193*	92687		Steelcut 3 0682*	92681
	Gentle 0373*	92686		Steelcut 3 0975	95931
	Gentle 0443*	92685		Storr 0612	95930
	Gentle 0553*	92682		Storr 1501*	31574
	Gentle 0733*	92684		Storr 3405*	95932
	Gentle 0753*	92683			
	Loop Loop 002*	92690			
	Loop Loop 003*	92688			
	Loop Loop 004*	92692			
	Loop Loop 005*	92689			
	Loop Loop 006*	92691			

Upholstery

Elmosoft Leather
by Elmo (Sweden)
Scandinavian Grain Leather, Semi-aniline
Lightfastness 6

Gentle 2
by Kvadrat (Netherlands)
60% New wool, 20% Nylon, 20% Polyester
90,000 Martindale
Pilling 4-5
Lightfastness 6-7
Flame resistance EN 1021: Part 1 & 2, BS 5852: Part 1, US Cal. TB 117

Loop Loop
by Dedar (Italy)
28% Polyester, 25% Acrylic, 24% Wool, 23% Recycled Cotton
52,000 Martindale
Pilling 4-5
Lightfastness 4-5
Flame resistance US Cal. TB 117-2013, UK BS5852 CIGAR. TEST

Steelcut 3
by Kvadrat (Netherlands)
90% New Wool, worsted 10% Nylon
100,000 Martindale
Pilling 3-4
Lightfastness 6
Flame resistance EN 1021: Part 1 & 2, US Cal. TB 117-2013, BS 5852: Part 1, UNI 9175 1IM

Bute Storr
by Bute Fabrics (Scotland)
97 % Pure New Wool, 3% Nylon
65,000 Martindale
Lightfastness 5
Flame resistance IMO FTP Code(2010) Annex 1, Part 8, BS 5852: Part 1 & 2 (Crib 5), US Cal. TB 121

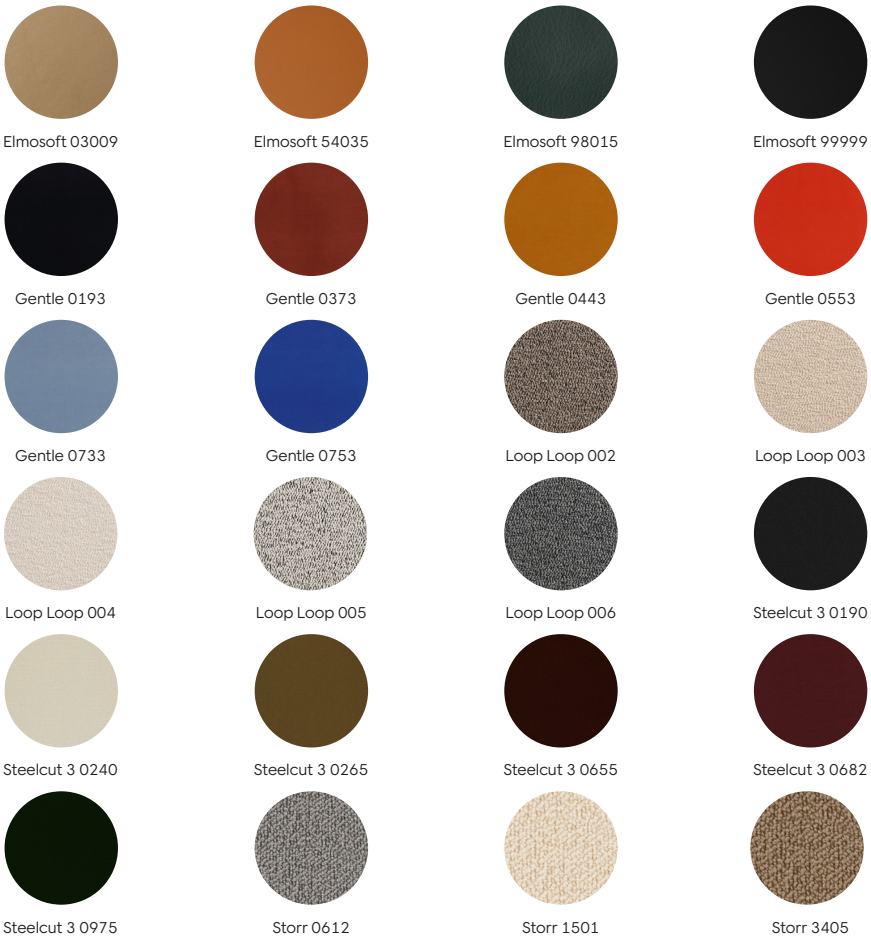

Samples
We supply samples of our material finishes. You can order them directly from hem.com/samples

***MTO**
Reach out to your local representative for the full selection of made-to-order options.

Inside material
PU Foam
Plywood Structure

Country of origin
Poland / Lithuania

3D model
3D files of all products are available on the product pages on hem.com

Palma Pouf Medium

Top view

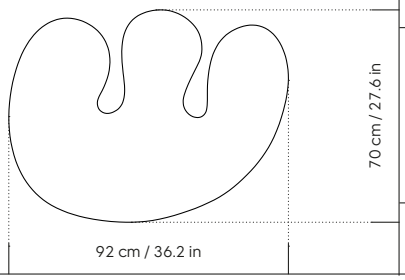

Side view

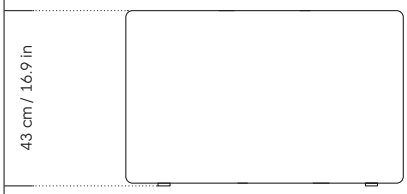

Palma Pouf Large

Design by Kusheda Mensah

A Palma Pouf upgrades any space. Graphic, arresting, refreshingly carefree, these elegant upholstered seats bring visual interest and facilitate interaction wherever they are used. Casual and unorthodox seating encourages constructive and thoughtful communication, observes designer Kusheda Mensah. Her Palma Poufs series for Hem consists of three decorative shapes made from a solid base and a soft but sturdy upper. Use them as focal points, disrupt a traditional seating arrangement or playfully juxtapose shape and texture with a single pouf. Encourage perching, parking, lounging. Palma Poufs are available in a wide range of finishes for supreme mix or match options.

Product name	Finish	SKU	Product name	Finish	SKU
Palma Pouf Large	Elmosoft 03009*	92659	**Palma Pouf Large**	Steelcut 3 0190*	92644
	Elmosoft 54035*	92657		Steelcut 3 0240*	92643
	Elmosoft 98015*	92660		Steelcut 3 0265*	95952
	Elmosoft 99999*	92658		Steelcut 3 0655*	31571
	Gentle 0193*	92651		Steelcut 3 0682*	92645
	Gentle 0373*	92650		Steelcut 3 0975	95928
	Gentle 0443*	92649		Storr 0612	95925
	Gentle 0553*	92646		Storr 1501*	95927
	Gentle 0733*	92648		Storr 3405*	31572
	Gentle 0753*	92647			
	Loop Loop 002*	92654			
	Loop Loop 003*	92652			
	Loop Loop 004*	92656			
	Loop Loop 005*	92653			
	Loop Loop 006*	92655			

Upholstery

Elmosoft Leather
by Elmo (Sweden)
Scandinavian Grain Leather, Semi-aniline
Lightfastness 6

Gentle 2
by Kvadrat (Netherlands)
60% New wool, 20% Nylon, 20% Polyester
90,000 Martindale
Pilling 4-5
Lightfastness 6-7
Flame resistance EN 1021: Part 1 & 2, BS 5852: Part 1, US Cal. TB 117

Loop Loop
by Dedar (Italy)
28% Polyester, 25% Acrylic, 24% Wool, 23% Recycled Cotton
52,000 Martindale
Pilling 4-5
Lightfastness 4-5
Flame resistance US Cal. TB 117-2013, UK BS5852 CIGAR. TEST

Steelcut 3
by Kvadrat (Netherlands)
90% New Wool, worsted 10% Nylon
100,000 Martindale
Pilling 3-4
Lightfastness 6
Flame resistance EN 1021: Part 1 & 2, US Cal. TB 117-2013, BS 5852: Part 1, UNI 9175 1IM

Bute Storr
by Bute Fabrics (Scotland)
97 % Pure New Wool, 3% Nylon
65,000 Martindale
Lightfastness 5
Flame resistance IMO FTP Code(2010) Annex 1, Part 8, BS 5852: Part 1 & 2 (Crib 5), US Cal. TB 121

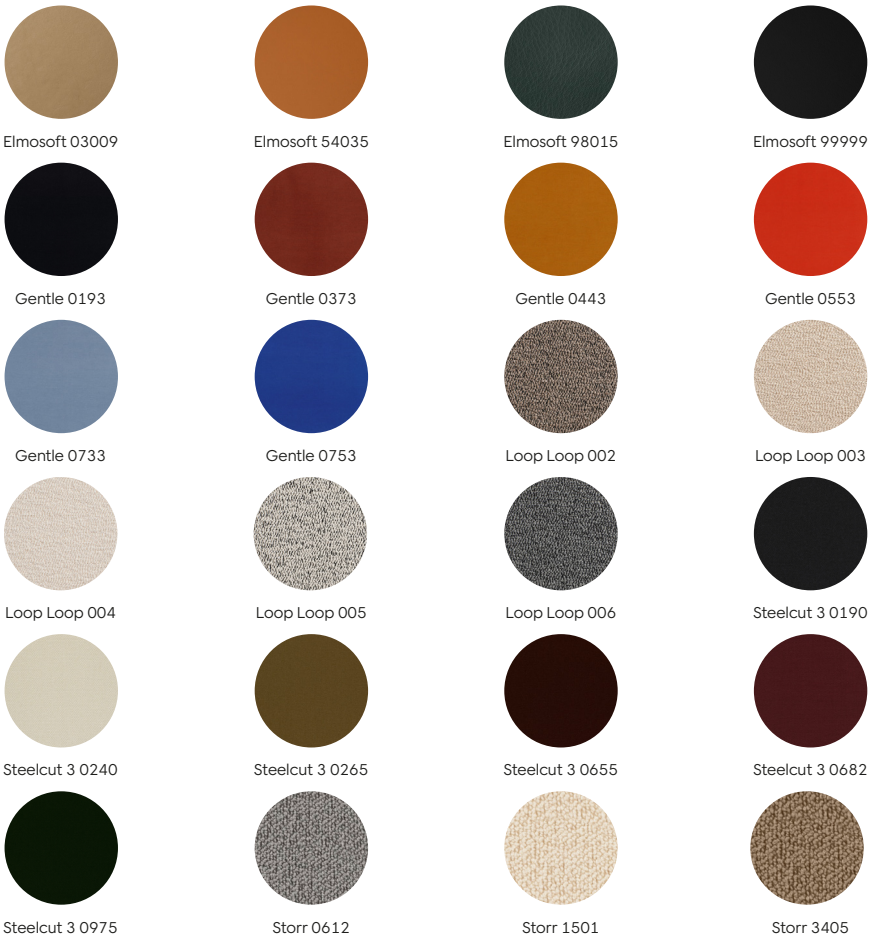

Samples
We supply samples of our material finishes. You can order them directly from hem.com/samples

***MTO**
Reach out to your local representative for the full selection of made-to-order options.

Inside material
PU Foam
Plywood Structure

Country of origin
Poland / Lithuania

3D model
3D files of all products are available on the product pages on hem.com

Palma Pouf Medium

Top view

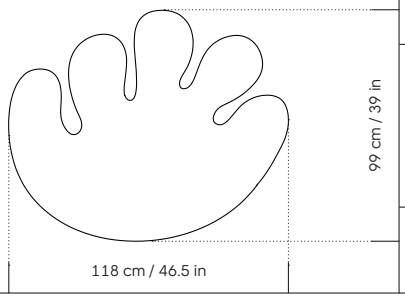

Side view

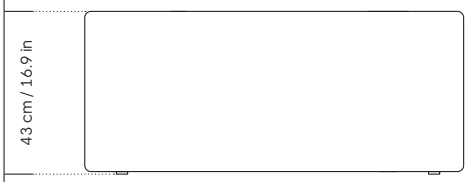

Palo Block Single-seater Sofa

Design by Hem

Our signature Palo Sofa system is the gift that keeps on giving. It is even more flexible, functional and hardworking with the addition of Palo Block Sofa. The system consists of different sizes of back and side panels, easy-apply connectors and partitions, all working together to create fully modular, private seating spaces. This makes Palo Block Sofa the ideal solution for busy public areas, work environments, or even domestic spaces where a little respite is required. Endless configurations are possible; Palo Block's extreme versatility is its super strength.

Upholstery
Amdal
by GU (Norway)
70% Virgin Wool, 30% Viscose
100,000 Martindale
Pilling 4
Lightfastness 5-7
Flame resistance Flame resistance EN 1021: Part 1 & 2, US Cal. TB 117-2013, BS 5852: Part 1 & 2 (Crib 5)

Sera
by Rohi (Germany)
94% Virgin Wool, 6% Polyamide
122,000 Martindale
Pilling 4-5
Lightfastness 5-8
Flame resistance EN 1021: Part 1 & 2, US Cal. TB 117-2013, BS 5852: Part 1

Autumn
by Kvadrat (Denmark)
100% Recycled Polyester
50,000 Martindale
Pilling 4-5
Lightfastness 6-7
Flame resistance ASTM E 84 Adhered, ASTM E84 Class A Unadhered, EN 1021: Part 1 & 2, IMO 2010 FTP Code Part 8, US Cal. TB 117-2013

Velluto Coex
by Chioccarello (Italy)
100% Cotton
65,000 Martindale
Pilling 4-5
Lightfastness 5
Flame resistance IMO, 1 IM UNI 9175, EN 1021-1:2006, EN 1021-2:2006, CRIB 5, TB 117:2013

Leg material
Steel
Powder coated

Inside material
PU foam
Wooden structure

Country of origin
Lithuania

3D model
3D files of all products are available on the product pages on hem.com

Tests & certifications
EN 16139:2013 – L2: Extreme use – Furniture – Strength, durability and safety – Requirements for non-domestic seating

ANSI/BIFMA X5.4-2020 American National Standard for Office and Institutional Furnishings – Public and Lounge Seating

Accesories
Each module can be configured with or without power outlet.

Choose between tall or low legs.

Modularity
This is a modular product that can be configured freely to fit your needs. Reach out to info@hem.com for assistance

Beige
Amdal (350)

Chalk
Amdal (130)

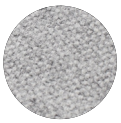

Grey
Amdal (110)

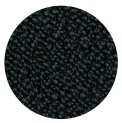

Pine
Sera (Hem exclusive)

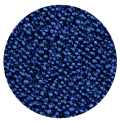

Cobalt
Sera (Hem exclusive)

Rosewood
Sera

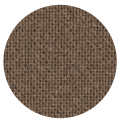

0361
Autumn

0221
Autumn

VL30
Velluto Coex

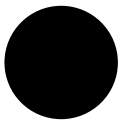

Jet Black (RAL 9005)
Leg color

Samples
We supply samples of our material finishes. You can order them directly from hem.com/samples

Graded-in Textile and Made-To-Order
Please refer to the price list or reach out to your local representative for our made-to-order options

Palo Block Single-seater

Top view

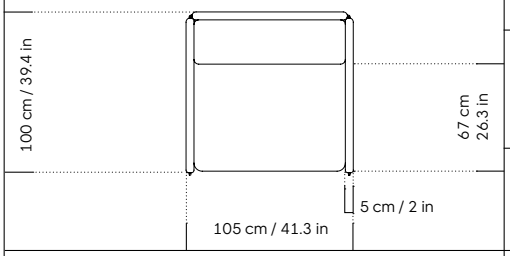

Palo Block Single-seater Low Back

Front view

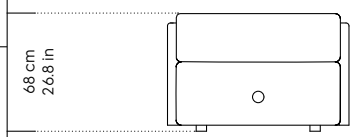

Palo Block Single-seater Medium Back

Front view

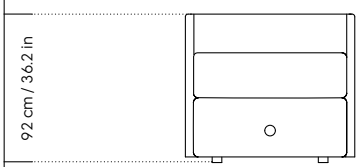

Palo Block Single-seater High Back

Front view

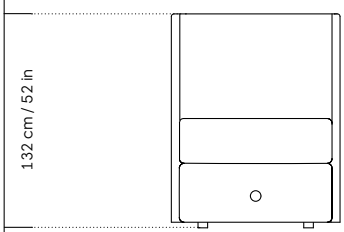

Palo Block 2-seater Sofa

Design by Hem

Our signature Palo Sofa system is the gift that keeps on giving. It is even more flexible, functional and hardworking with the addition of Palo Block Sofa. The system consists of different sizes of back and side panels, easy-apply connectors and partitions, all working together to create fully modular, private seating spaces. This makes Palo Block Sofa the ideal solution for busy public areas, work environments, or even domestic spaces where a little respite is required. Endless configurations are possible; Palo Block's extreme versatility is its super strength.

Upholstery
Amdal
by GU (Norway)
70% Virgin Wool, 30% Viscose
100,000 Martindale
Pilling 4
Lightfastness 5-7
Flame resistance Flame resistance EN 1021: Part 1 & 2, US Cal. TB 117-2013, BS 5852: Part 1 & 2 (Crib 5)

Sera
by Rohi (Germany)
94% Virgin Wool, 6% Polyamide
122,000 Martindale
Pilling 4-5
Lightfastness 5-8
Flame resistance EN 1021: Part 1 & 2, US Cal. TB 117-2013, BS 5852: Part 1

Autumn
by Kvadrat (Denmark)
100% Recycled Polyester
50,000 Martindale
Pilling 4-5
Lightfastness 6-7
Flame resistance ASTM E 84 Adhered, ASTM E84 Class A Unadhered, EN 1021: Part 1 & 2, IMO 2010 FTP Code Part 8, US Cal. TB 117-2013

Velluto Coex
by Chioccarello (Italy)
100% Cotton
65,000 Martindale
Pilling 4-5
Lightfastness 5
Flame resistance IMO, 1 IM UNI 9175, EN 1021-1:2006, EN 1021-2:2006, CRIB 5, TB 117:2013

Leg material
Steel
Powder coated

Inside material
PU foam
Wooden structure

Country of origin
Lithuania

3D model
3D files of all products are available on the product pages on hem.com

Tests & certifications
EN 16139:2013 – L2: Extreme use – Furniture – Strength, durability and safety – Requirements for non-domestic seating

ANSI/BIFMA X5.4-2020 American National Standard for Office and Institutional Furnishings – Public and Lounge Seating

Accesories
Each module can be configured with or without power outlet.

Choose between tall or low legs.

Modularity
This is a modular product that can be configured freely to fit your needs. Reach out to info@hem.com for assistance

Beige
Amdal (350)

Chalk
Amdal (130)

Grey
Amdal (110)

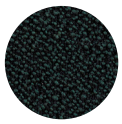

Pine
Sera (Hem exclusive)

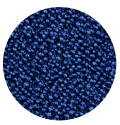

Cobalt
Sera (Hem exclusive)

Rosewood
Sera

0361
Autumn

0221
Autumn

VL30
Velluto Coex

Jet Black (RAL 9005)
Leg color

Samples
We supply samples of our material finishes. You can order them directly from hem.com/samples

Graded-in Textile and Made-To-Order
Please refer to the price list or reach out to your local representative for our made-to-order options

Palo Block 2-seater Sofa

Top view

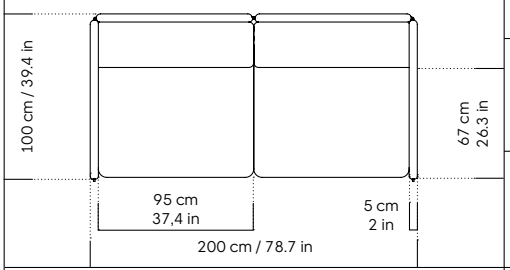

Palo Block 2-seater Sofa Low Back

Front view

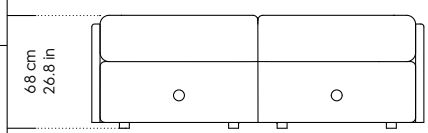

Palo Block 2-seater Sofa Medium Back

Front view

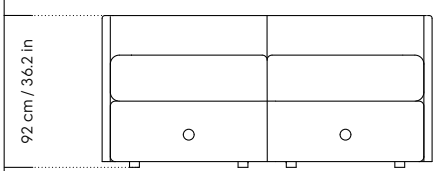

Palo Block 2-seater Sofa High Back

Front view

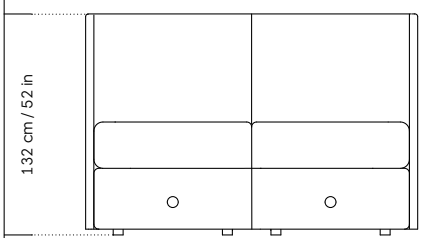

Palo Block 2-seater Sofa with Armrests

Design by Hem

Our signature Palo Sofa system is the gift that keeps on giving. It is even more flexible, functional and hardworking with the addition of Palo Block Sofa. The system consists of different sizes of back and side panels, easy-apply connectors and partitions, all working together to create fully modular, private seating spaces. This makes Palo Block Sofa the ideal solution for busy public areas, work environments, or even domestic spaces where a little respite is required. Endless configurations are possible; Palo Block's extreme versatility is its super strength.

Upholstery
Amdal
by GU (Norway)
70% Virgin Wool, 30% Viscose
100,000 Martindale
Pilling 4
Lightfastness 5-7
Flame resistance Flame resistance EN 1021: Part 1 & 2, US Cal. TB 117-2013, BS 5852: Part 1 & 2 (Crib 5)

Sera
by Rohi (Germany)
94% Virgin Wool, 6% Polyamide
122,000 Martindale
Pilling 4-5
Lightfastness 5-8
Flame resistance EN 1021: Part 1 & 2, US Cal. TB 117-2013, BS 5852: Part 1

Autumn
by Kvadrat (Denmark)
100% Recycled Polyester
50,000 Martindale
Pilling 4-5
Lightfastness 6-7
Flame resistance ASTM E 84 Adhered, ASTM E84 Class A Unadhered, EN 1021: Part 1 & 2, IMO 2010 FTP Code Part 8, US Cal. TB 117-2013

Velluto Coex
by Chioccarello (Italy)
100% Cotton
65,000 Martindale
Pilling 4-5
Lightfastness 5
Flame resistance IMO, 1 IM UNI 9175, EN 1021-1:2006, EN 1021-2:2006, CRIB 5, TB 117:2013

Leg material
Steel
Powder coated

Inside material
PU foam
Wooden structure

Country of origin
Lithuania

3D model
3D files of all products are available on the product pages on hem.com

Tests & certifications
EN 16139:2013 – L2: Extreme use – Furniture – Strength, durability and safety – Requirements for non-domestic seating

ANSI/BIFMA X5.4-2020 American National Standard for Office and Institutional Furnishings – Public and Lounge Seating

Accesories
Each module can be configured with or without power outlet.

Choose between tall or low legs.

Modularity
This is a modular product that can be configured freely to fit your needs. Reach out to info@hem.com for assistance

Beige
Amdal (350)

Chalk
Amdal (130)

Grey
Amdal (110)

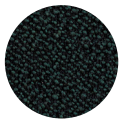

Pine
Sera (Hem exclusive)

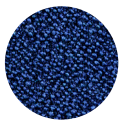

Cobalt
Sera (Hem exclusive)

Rosewood
Sera

0361
Autumn

0221
Autumn

VL30
Velluto Coex

Jet Black (RAL 9005)
Leg color

Samples
We supply samples of our material finishes. You can order them directly from hem.com/samples

Graded-in Textile and Made-To-Order
Please refer to the price list or reach out to your local representative for our made-to-order options

Palo Block 2-seater Sofa with Armrests

Top view

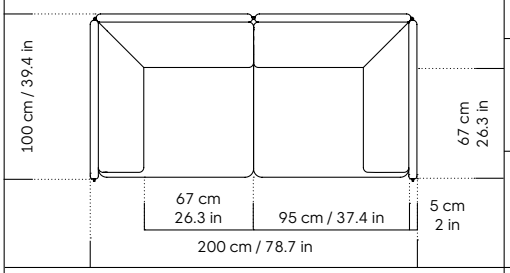

Palo Block 2-seater Sofa Low Back with Armrests

Front view

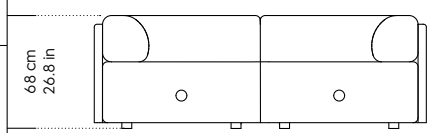

Palo Block 2-seater Sofa Medium Back with Armrests

Front view

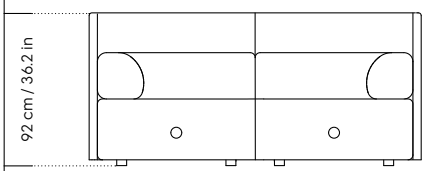

Palo Block 2-seater Sofa High Back with Armrests

Front view

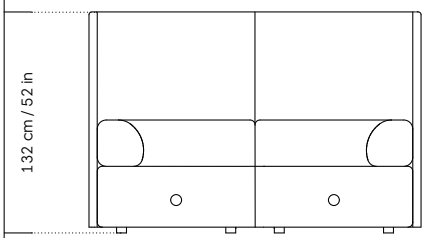

Palo Block 3-seater Sofa

Design by Hem

Our signature Palo Sofa system is the gift that keeps on giving. It is even more flexible, functional and hardworking with the addition of Palo Block Sofa. The system consists of different sizes of back and side panels, easy-apply connectors and partitions, all working together to create fully modular, private seating spaces. This makes Palo Block Sofa the ideal solution for busy public areas, work environments, or even domestic spaces where a little respite is required. Endless configurations are possible; Palo Block's extreme versatility is its super strength.

Upholstery
Amdal
by GU (Norway)
70% Virgin Wool, 30% Viscose
100,000 Martindale
Pilling 4
Lightfastness 5-7
Flame resistance Flame resistance EN 1021: Part 1 & 2, US Cal. TB 117-2013, BS 5852: Part 1 & 2 (Crib 5)

Sera
by Rohi (Germany)
94% Virgin Wool, 6% Polyamide
122,000 Martindale
Pilling 4-5
Lightfastness 5-8
Flame resistance EN 1021: Part 1 & 2, US Cal. TB 117-2013, BS 5852: Part 1

Autumn
by Kvadrat (Denmark)
100% Recycled Polyester
50,000 Martindale
Pilling 4-5
Lightfastness 6-7
Flame resistance ASTM E 84 Adhered, ASTM E84 Class A Unadhered, EN 1021: Part 1 & 2, IMO 2010 FTP Code Part 8, US Cal. TB 117-2013

Velluto Coex
by Chioccarello (Italy)
100% Cotton
65,000 Martindale
Pilling 4-5
Lightfastness 5
Flame resistance IMO, 1 IM UNI 9175, EN 1021-1:2006, EN 1021-2:2006, CRIB 5, TB 117:2013

Leg material
Steel
Powder coated

Inside material
PU foam
Wooden structure

Country of origin
Lithuania

3D model
3D files of all products are available on the product pages on hem.com

Tests & certifications
EN 16139:2013 – L2: Extreme use – Furniture – Strength, durability and safety – Requirements for non-domestic seating

ANSI/BIFMA X5.4-2020 American National Standard for Office and Institutional Furnishings – Public and Lounge Seating

Accesories
Each module can be configured with or without power outlet.

Choose between tall or low legs.

Modularity
This is a modular product that can be configured freely to fit your needs. Reach out to info@hem.com for assistance

Beige
Amdal (350)

Chalk
Amdal (130)

Grey
Amdal (110)

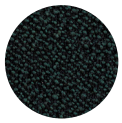

Pine
Sera (Hem exclusive)

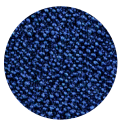

Cobalt
Sera (Hem exclusive)

Rosewood
Sera

0361
Autumn

0221
Autumn

VL30
Velluto Coex

Jet Black (RAL 9005)
Leg color

Samples
We supply samples of our material finishes. You can order them directly from hem.com/samples

Graded-in Textile and Made-To-Order
Please refer to the price list or reach out to your local representative for our made-to-order options

Palo Block 3-seater Sofa

Top view

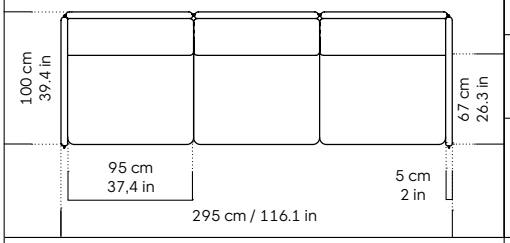

Palo Block 3-seater Sofa Low Back

Front view

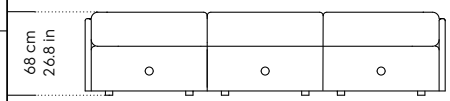

Palo Block 3-seater Sofa Medium Back

Front view

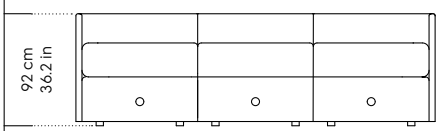

Palo Block 3-seater Sofa High Back

Front view

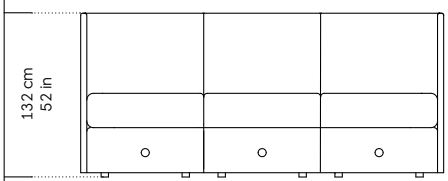

Palo Block 3-seater Sofa with Armrests

Design by Hem

Our signature Palo Sofa system is the gift that keeps on giving. It is even more flexible, functional and hardworking with the addition of Palo Block Sofa. The system consists of different sizes of back and side panels, easy-apply connectors and partitions, all working together to create fully modular, private seating spaces. This makes Palo Block Sofa the ideal solution for busy public areas, work environments, or even domestic spaces where a little respite is required. Endless configurations are possible; Palo Block's extreme versatility is its super strength.

Upholstery
Amdal
by GU (Norway)
70% Virgin Wool, 30% Viscose
100,000 Martindale
Pilling 4
Lightfastness 5-7
Flame resistance Flame resistance EN 1021: Part 1 & 2, US Cal. TB 117-2013, BS 5852: Part 1 & 2 (Crib 5)

Sera
by Rohi (Germany)
94% Virgin Wool, 6% Polyamide
122,000 Martindale
Pilling 4-5
Lightfastness 5-8
Flame resistance EN 1021: Part 1 & 2, US Cal. TB 117-2013, BS 5852: Part 1

Autumn
by Kvadrat (Denmark)
100% Recycled Polyester
50,000 Martindale
Pilling 4-5
Lightfastness 6-7
Flame resistance ASTM E 84 Adhered, ASTM E84 Class A Unadhered, EN 1021: Part 1 & 2, IMO 2010 FTP Code Part 8, US Cal. TB 117-2013

Velluto Coex
by Chioccarello (Italy)
100% Cotton
65,000 Martindale
Pilling 4-5
Lightfastness 5
Flame resistance IMO, 1 IM UNI 9175, EN 1021-1:2006, EN 1021-2:2006, CRIB 5, TB 117:2013

Leg material
Steel
Powder coated

Inside material
PU foam
Wooden structure

Country of origin
Lithuania

3D model
3D files of all products are available on the product pages on hem.com

Tests & certifications
EN 16139:2013 – L2: Extreme use – Furniture – Strength, durability and safety – Requirements for non-domestic seating

ANSI/BIFMA X5.4-2020 American National Standard for Office and Institutional Furnishings – Public and Lounge Seating

Accesories
Each module can be configured with or without power outlet.

Choose between tall or low legs.

Modularity
This is a modular product that can be configured freely to fit your needs. Reach out to info@hem.com for assistance

Beige
Amdal (350)

Chalk
Amdal (130)

Grey
Amdal (110)

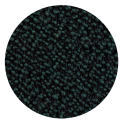

Pine
Sera (Hem exclusive)

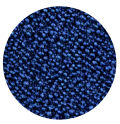

Cobalt
Sera (Hem exclusive)

Rosewood
Sera

0361
Autumn

0221
Autumn

VL30
Velluto Coex

Jet Black (RAL 9005)
Leg color

Samples
We supply samples of our material finishes. You can order them directly from hem.com/samples

Graded-in Textile and Made-To-Order
Please refer to the price list or reach out to your local representative for our made-to-order options

Palo Block 3-seater Sofa with Armrests

Top view

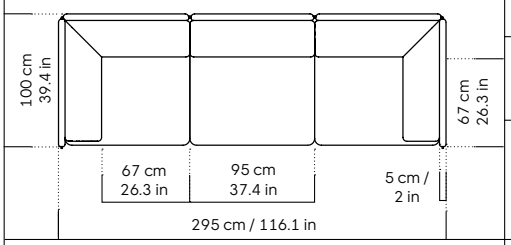

Palo Block 3-seater Sofa Low Back with Armrests

Front view

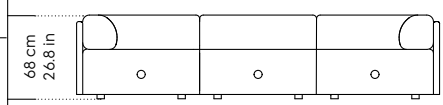

Palo Block 3-seater Sofa Medium Back with Armrests

Front view

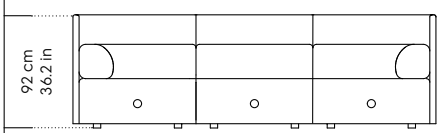

Palo Block 3-seater Sofa High Back with Armrests

Front view

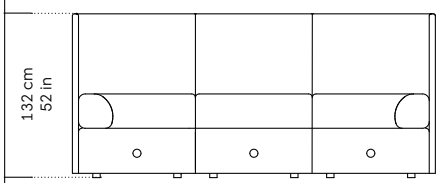

Palo Side Table

Design by Hem Design Studio

Palo Side Table is the perfect extension to your Palo Sofa, Lounger, Single-Seater or Ottoman. A resting spot for coffee cup, laptop or notebook, it's a great addition to any environment. Attach it to your Palo by replacing an existing leg or insert it in an available slot in the sofa base. Available for all Palo variant colors in Black, Chalk, Grey and Blue.

Product name	Finish	SKU
Palo Side Table	Blue	30288
	Chalk	30289
	Grey	30290
	Black	30291

Material
Steel
Powder Coated

Country of origin
Poland

Tests & certifications
EN 16139:2013 – L2: Extreme use – Furniture – Strength, durability and safety – Requirements for non-domestic seating

3D model
3D files of all products are available on the product pages on hem.com

Product accessory
Palo Sofa

Always in stock
We keep all our products in stock and ready to ship from our warehouses in the US and EU

Blue (RAL 5011)
Powder Coated Steel

Chalk (RAL 9010)
Powder Coated Steel

Grey (RAL 7035)
Powder Coated Steel

Black (RAL 9005)
Powder Coated Steel

Samples
We supply samples of all our material finishes, order them directly from hem.com/samples

Palo Side Table

Top view

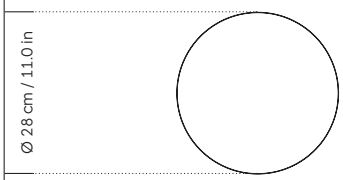

Top view

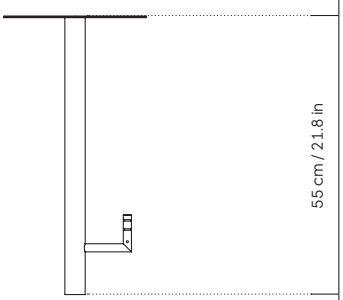

Palo 2-Seater Sofa with Armrests

Design by Hem

Palo is whatever you want it to be; a chaise, an ottoman, a sofa. This is furniture that evolves and grows with you. Elegant wood and metal legs are a hallmark of the architectural Palo family; as well as providing detail, they are the secret to a modular system that allows cushions and armrests to be moved and repositioned across the whole series. It doesn't end there... Want a side table for your tea? Or need to replace an individual element? Our approach enables you to update and grow your system, adapting to whatever life brings.

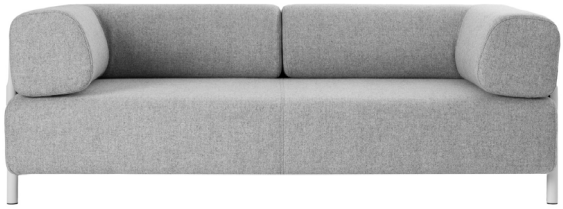

Upholstery
Amdal
by GU (Norway)
70% Virgin Wool, 30% Viscose
100,000 Martindale
Pilling 4
Lightfastness 5-7
Flame resistance EN 1021: Part 1 & 2, BS 5852: Part 1 & 2 (Crib 5), US Cal. TB 117

Sera
by Rohi (Germany)
94% Virgin Wool, 6% Polyamide
122,000 Martindale
Pilling 4-5
Lightfastness 5-8
Flame resistance EN 1021: Part 1 & 2, BS 5852: Part 1 & 2 (Crib 5), US Cal. TB 117

Bute Storr
by Bute Fabrics (Scotland)
97% Pure New Wool, 3% Nylon
65,000 Martindale
Lightfastness 5 (BS EN ISO 105 – B02)
Flame resistance IMO FTP Code(2010) Annex 1, Part 8, BS 5852: PART 1 & 2 (Crib 5), US Cal. TB 117

Autumn
by Kvadrat (Denmark)
100% Recycled Polyester
50,000 Martindale
Pilling 4-5
Lightfastness 6-7
Flame resistance ASTM E 84 Adhered, ASTM E84 Class A Unadhered, EN 1021: Part 1 & 2, IMO 2010 FTP Code Part 8, US Cal. TB 117-2013

Velluto Coex
by Chioccarello (Italy)
100% Cotton
65,000 Martindale
Pilling 4-5
Lightfastness 5
Flame resistance IMO, 1 IM UNI 9175, EN 1021-1:2006, EN 1021-2:2006, CRIB 5, TB 117:2013

Leg material
Beech wood
Painted

Steel
Powder coated

Inside material
PU foam
Wooden structure

Country of origin
Lithuania

3D model
3D files of all products are available on the product pages on hem.com

Product accessory
Palo Side Table

Tests & certifications
EN 16139:2013 – L2: Extreme use – Furniture – Strength, durability and safety – Requirements for non-domestic seating

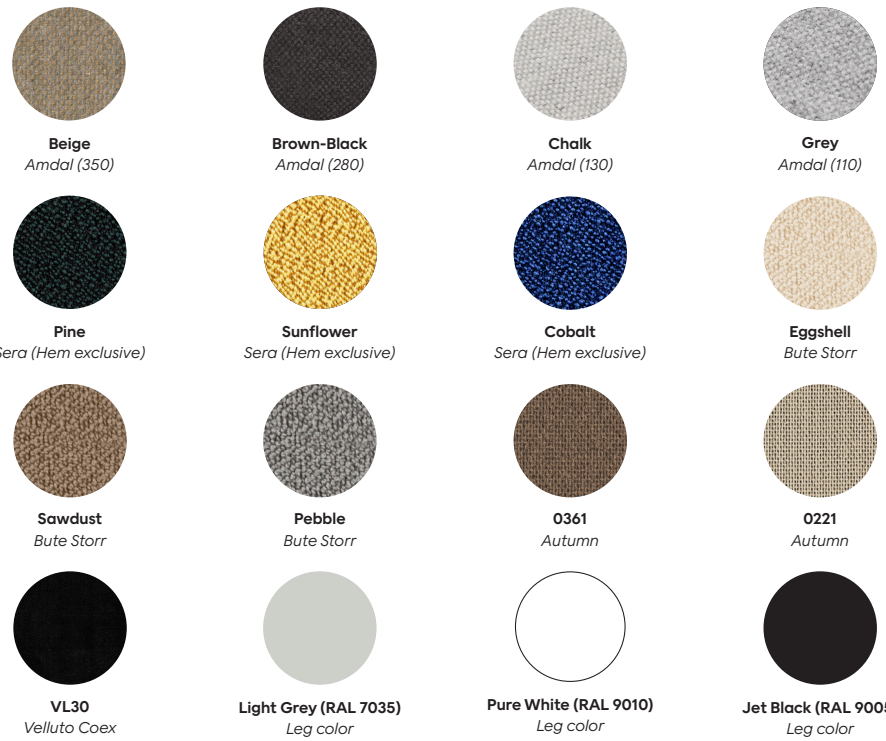

Modularity
This is a modular product that can be configured freely to fit your needs. Reach out to info@hem.com for assistance

Samples
We supply samples of our material finishes. You can order them directly from hem.com/samples

Graded-in Textile and Made-To-Order
Reach out to your local representative for the full selection of made-to-order options.

Palo 2-seater Sofa with Armrests

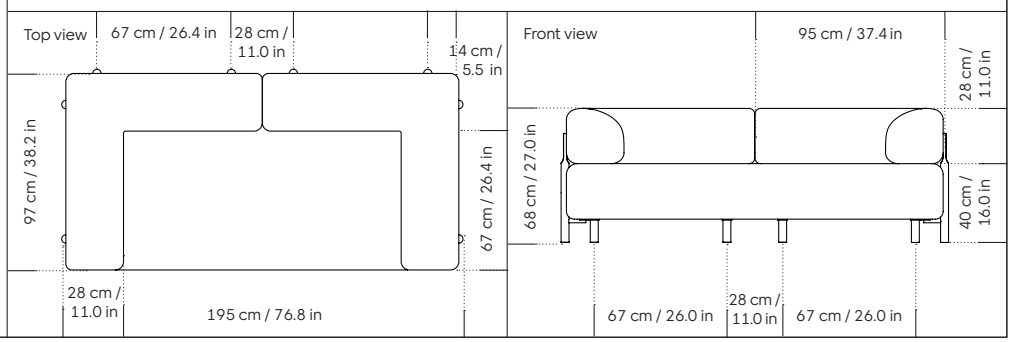

Palo 2-Seater Sofa

Design by Hem

Palo is whatever you want it to be; a chaise, an ottoman, a sofa. This is furniture that evolves and grows with you. Elegant wood and metal legs are a hallmark of the architectural Palo family; as well as providing detail, they are the secret to a modular system that allows cushions and armrests to be moved and repositioned across the whole series. It doesn't end there... Want a side table for your tea? Or need to replace an individual element? Our approach enables you to update and grow your system, adapting to whatever life brings.

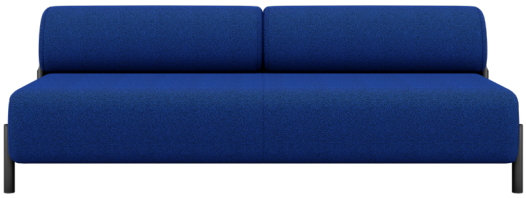

Upholstery
Amdal
by GU (Norway)
70% Virgin Wool, 30% Viscose
100,000 Martindale
Pilling 4
Lightfastness 5-7
Flame resistance EN 1021: Part 1 & 2, BS 5852: Part 1 & 2 (Crib 5), US Cal. TB 117

Sera
by Rohi (Germany)
94% Virgin Wool, 6% Polyamide
122,000 Martindale
Pilling 4-5
Lightfastness 5-8
Flame resistance EN 1021: Part 1 & 2, BS 5852: Part 1 & 2 (Crib 5), US Cal. TB 117

Bute Storr
by Bute Fabrics (Scotland)
97% Pure New Wool, 3% Nylon
65,000 Martindale
Lightfastness 5 (BS EN ISO 105 – B02)
Flame resistance IMO FTP Code(2010) Annex 1, Part 8, BS 5852: PART 1 & 2 (Crib 5), US Cal. TB 117

Autumn
by Kvadrat (Denmark)
100% Recycled Polyester
50,000 Martindale
Pilling 4-5
Lightfastness 6-7
Flame resistance ASTM E 84 Adhered, ASTM E84 Class A Unadhered, EN 1021: Part 1 & 2, IMO 2010 FTP Code Part 8, US Cal. TB 117-2013

Velluto Coex
by Chioccarello (Italy)
100% Cotton
65,000 Martindale
Pilling 4-5
Lightfastness 5
Flame resistance IMO, 1 IM UNI 9175, EN 1021-1:2006, EN 1021-2:2006, CRIB 5, TB 117:2013

Leg material
Beech wood
Painted

Steel
Powder coated

Inside material
PU foam
Wooden structure

Country of origin
Lithuania

3D model
3D files of all products are available on the product pages on hem.com

Product accessory
Palo Side Table

Tests & certifications
EN 16139:2013 – L2: Extreme use – Furniture – Strength, durability and safety – Requirements for non-domestic seating

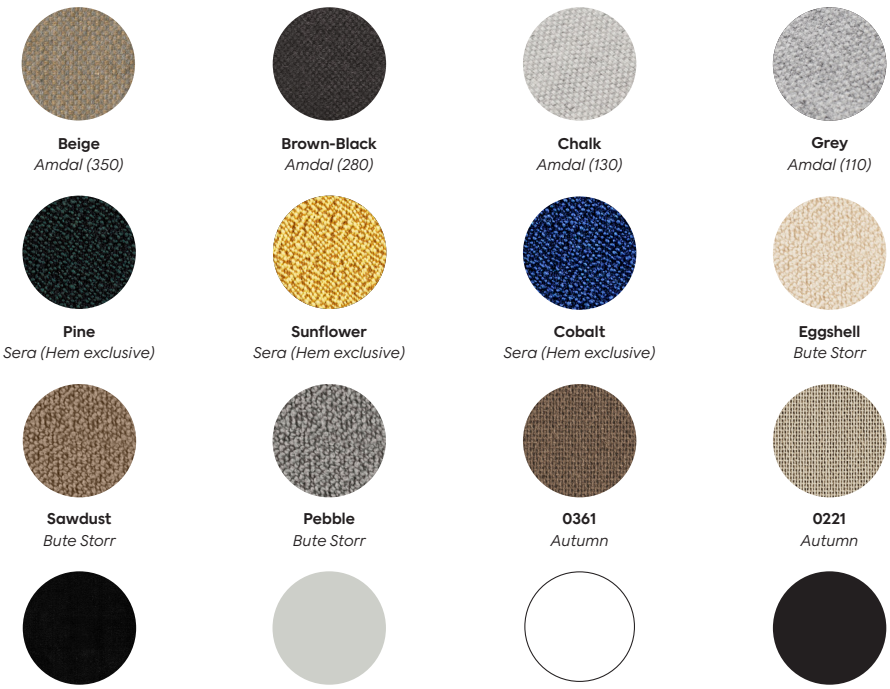

Modularity
This is a modular product that can be configured freely to fit your needs. Reach out to info@hem.com for assistance

Samples
We supply samples of our material finishes. You can order them directly from hem.com/samples

Graded-in Textile and Made-To-Order
Reach out to your local representative for the full selection of made-to-order options.

Palo 2-seater Sofa

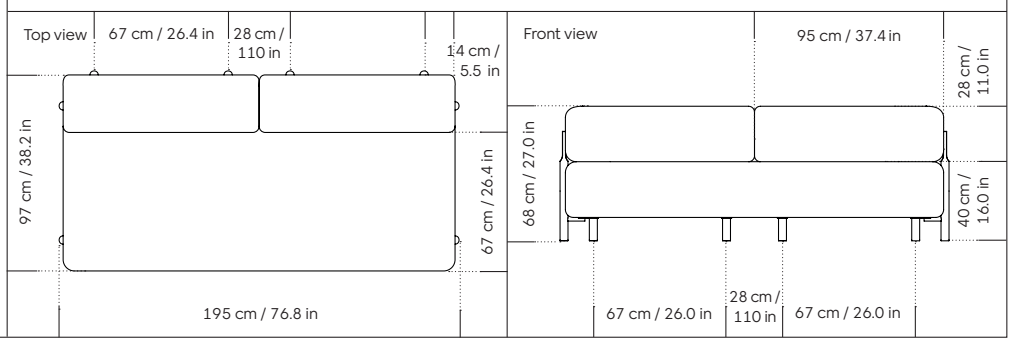

Palo Corner Sofa

Design by Hem

Palo is whatever you want it to be; a chaise, an ottoman, a sofa. This is furniture that evolves and grows with you. Elegant wood and metal legs are a hallmark of the architectural Palo family; as well as providing detail, they are the secret to a modular system that allows cushions and armrests to be moved and repositioned across the whole series. It doesn't end there... Want a side table for your tea? Or need to replace an individual element? Our approach enables you to update and grow your system, adapting to whatever life brings.

Upholstery
Amdal
by GU (Norway)
70% Virgin Wool, 30% Viscose
100,000 Martindale
Pilling 4
Lightfastness 5-7
Flame resistance EN 1021: Part 1 & 2, BS 5852: Part 1 & 2 (Crib 5), US Cal. TB 117

Sera
by Rohi (Germany)
94% Virgin Wool, 6% Polyamide
122,000 Martindale
Pilling 4-5
Lightfastness 5-8
Flame resistance EN 1021: Part 1 & 2, BS 5852: Part 1 & 2 (Crib 5), US Cal. TB 117

Bute Storr
by Bute Fabrics (Scotland)
97% Pure New Wool, 3% Nylon
65,000 Martindale
Lightfastness 5 (BS EN ISO 105 – B02)
Flame resistance IMO FTP Code(2010) Annex 1, Part 8, BS 5852: PART 1 & 2 (Crib 5), US Cal. TB 117

Autumn
by Kvadrat (Denmark)
100% Recycled Polyester
50,000 Martindale
Pilling 4-5
Lightfastness 6-7
Flame resistance ASTM E 84 Adhered, ASTM E84 Class A Unadhered, EN 1021: Part 1 & 2, IMO 2010 FTP Code Part 8, US Cal. TB 117-2013

Velluto Coex
by Chioccarello (Italy)
100% Cotton
65,000 Martindale
Pilling 4-5
Lightfastness 5
Flame resistance IMO, 1 IM UNI 9175, EN 1021-1:2006, EN 1021-2:2006, CRIB 5, TB 117:2013

Leg material
Beech wood
Painted

Steel
Powder coated

Inside material
PU foam
Wooden structure

Country of origin
Lithuania

3D model
3D files of all products are available on the product pages on hem.com

Product accessory
Palo Side Table

Tests & certifications
EN 16139:2013 – L2: Extreme use – Furniture – Strength, durability and safety – Requirements for non-domestic seating

Beige
Amdal (350)

Brown-Black
Amdal (280)

Chalk
Amdal (130)

Grey
Amdal (110)

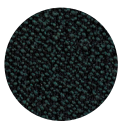

Pine
Sera (Hem exclusive)

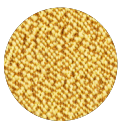

Sunflower
Sera (Hem exclusive)

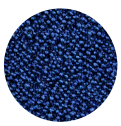

Cobalt
Sera (Hem exclusive)

Eggshell
Bute Storr

Sawdust
Bute Storr

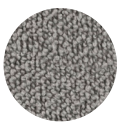

Pebble
Bute Storr

0361
Autumn

0221
Autumn

VL30
Velluto Coex

Light Grey (RAL 7035)
Leg color

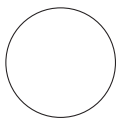

Pure White (RAL 9010)
Leg color

Jet Black (RAL 9005)
Leg color

Modularity
This is a modular product that can be configured freely to fit your needs. Reach out to info@hem.com for assistance

Samples
We supply samples of our material finishes. You can order them directly from hem.com/samples

Graded-in Textile and Made-To-Order
Reach out to your local representative for the full selection of made-to-order options.

Palo Corner Sofa

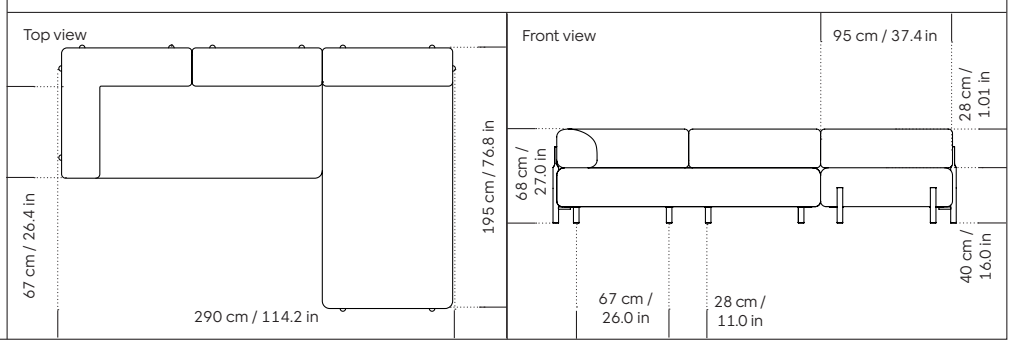

Palo Lounger

Design by Hem

Palo is whatever you want it to be; a chaise, an ottoman, a sofa. This is furniture that evolves and grows with you. Elegant wood and metal legs are a hallmark of the architectural Palo family; as well as providing detail, they are the secret to a modular system that allows cushions and armrests to be moved and repositioned across the whole series. It doesn't end there... Want a side table for your tea? Or need to replace an individual element? Our approach enables you to update and grow your system, adapting to whatever life brings.

Upholstery
Amdal
by GU (Norway)
70% Virgin Wool, 30% Viscose
100,000 Martindale
Pilling 4
Lightfastness 5-7
Flame resistance EN 1021: Part 1 & 2, BS 5852: Part 1 & 2 (Crib 5), US Cal. TB 117

Sera
by Rohi (Germany)
94% Virgin Wool, 6% Polyamide
122,000 Martindale
Pilling 4-5
Lightfastness 5-8
Flame resistance EN 1021: Part 1 & 2, BS 5852: Part 1 & 2 (Crib 5), US Cal. TB 117

Bute Storr
by Bute Fabrics (Scotland)
97% Pure New Wool, 3% Nylon
65,000 Martindale
Lightfastness 5 (BS EN ISO 105 – B02)
Flame resistance IMO FTP Code(2010) Annex 1, Part 8, BS 5852: PART 1 & 2 (Crib 5), US Cal. TB 117

Autumn
by Kvadrat (Denmark)
100% Recycled Polyester
50,000 Martindale
Pilling 4-5
Lightfastness 6-7
Flame resistance ASTM E 84 Adhered, ASTM E84 Class A Unadhered, EN 1021: Part 1 & 2, IMO 2010 FTP Code Part 8, US Cal. TB 117-2013

Velluto Coex
by Chioccarello (Italy)
100% Cotton
65,000 Martindale
Pilling 4-5
Lightfastness 5
Flame resistance IMO, 1 IM UNI 9175, EN 1021-1:2006, EN 1021-2:2006, CRIB 5, TB 117:2013

Leg material
Beech wood
Painted

Steel
Powder coated

Inside material
PU foam
Wooden structure

Country of origin
Lithuania

3D model
3D files of all products are available on the product pages on hem.com

Product accessory
Palo Side Table

Tests & certifications
EN 16139:2013 – L2: Extreme use – Furniture – Strength, durability and safety – Requirements for non-domestic seating

Beige
Amdal (350)

Brown-Black
Amdal (280)

Chalk
Amdal (130)

Grey
Amdal (110)

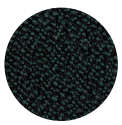
Pine
Sera (Hem exclusive)

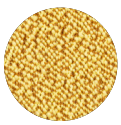
Sunflower
Sera (Hem exclusive)

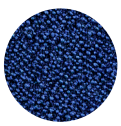
Cobalt
Sera (Hem exclusive)

Eggshell
Bute Storr

Sawdust
Bute Storr

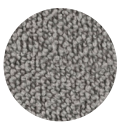
Pebble
Bute Storr

0361
Autumn

0221
Autumn

VL30
Velluto Coex

Light Grey (RAL 7035)
Leg color

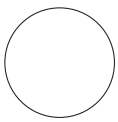
Pure White (RAL 9010)
Leg color

Jet Black (RAL 9005)
Leg color

Modularity
This is a modular product that can be configured freely to fit your needs. Reach out to info@hem.com for assistance

Samples
We supply samples of our material finishes. You can order them directly from hem.com/samples

Graded-in Textile and Made-To-Order
Reach out to your local representative for the full selection of made-to-order options.

Palo Lounger Sofa

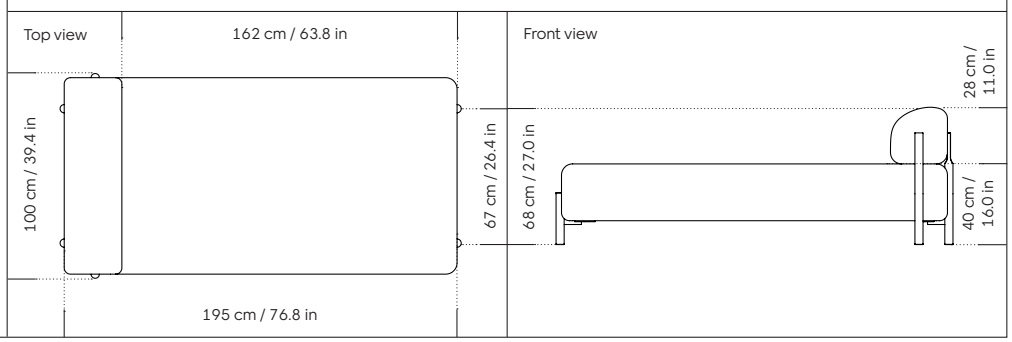

Palo 2-seater Sofa Chaise

Design by Hem

Palo is whatever you want it to be; a chaise, an ottoman, a sofa. This is furniture that evolves and grows with you. Elegant wood and metal legs are a hallmark of the architectural Palo family; as well as providing detail, they are the secret to a modular system that allows cushions and armrests to be moved and repositioned across the whole series. It doesn't end there... Want a side table for your tea? Or need to replace an individual element? Our approach enables you to update and grow your system, adapting to whatever life brings.

Upholstery
Amdal
by GU (Norway)
70% Virgin Wool, 30% Viscose
100,000 Martindale
Pilling 4
Lightfastness 5-7
Flame resistance EN 1021: Part 1 & 2, BS 5852: Part 1 & 2 (Crib 5), US Cal. TB 117

Sera
by Rohi (Germany)
94% Virgin Wool, 6% Polyamide
122,000 Martindale
Pilling 4-5
Lightfastness 5-8
Flame resistance EN 1021: Part 1 & 2, BS 5852: Part 1 & 2 (Crib 5), US Cal. TB 117

Bute Storr
by Bute Fabrics (Scotland)
97% Pure New Wool, 3% Nylon
65,000 Martindale
Lightfastness 5 (BS EN ISO 105 – B02)
Flame resistance IMO FTP Code(2010) Annex 1, Part 8, BS 5852: PART 1 & 2 (Crib 5), US Cal. TB 117

Autumn
by Kvadrat (Denmark)
100% Recycled Polyester
50,000 Martindale
Pilling 4-5
Lightfastness 6-7
Flame resistance ASTM E 84 Adhered, ASTM E84 Class A Unadhered, EN 1021: Part 1 & 2, IMO 2010 FTP Code Part 8, US Cal. TB 117-2013

Velluto Coex
by Chioccarello (Italy)
100% Cotton
65,000 Martindale
Pilling 4-5
Lightfastness 5
Flame resistance IMO, 1 IM UNI 9175, EN 1021-1:2006, EN 1021-2:2006, CRIB 5, TB 117:2013

Leg material
Beech wood
Painted

Steel
Powder coated

Inside material
PU foam
Wooden structure

Country of origin
Lithuania

3D model
3D files of all products are available on the product pages on hem.com

Product accessory
Palo Side Table

Tests & certifications
EN 16139:2013 – L2: Extreme use – Furniture – Strength, durability and safety – Requirements for non-domestic seating

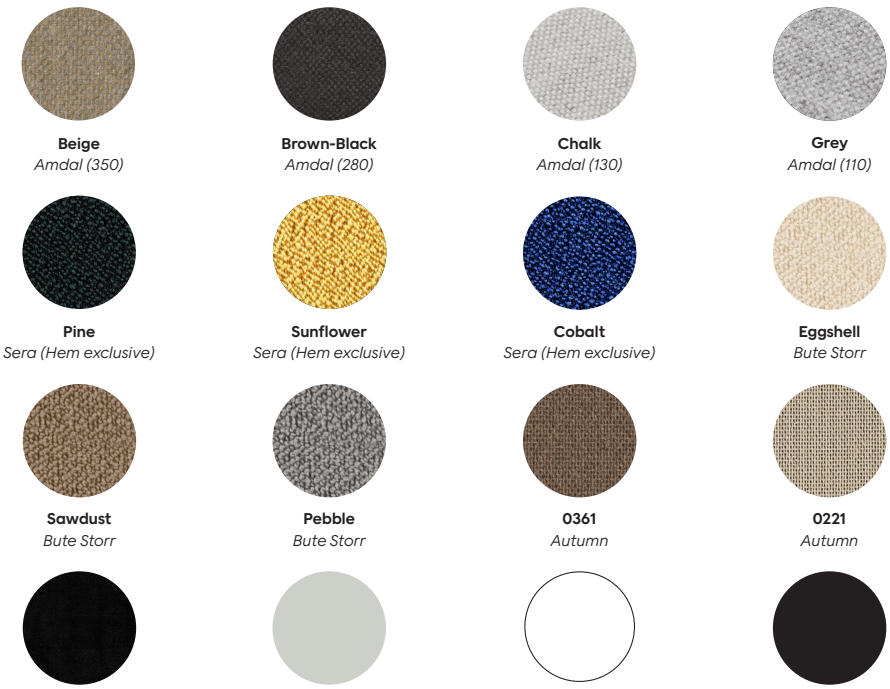

Beige *Amdal (350)*
Brown-Black *Amdal (280)*
Chalk *Amdal (130)*
Grey *Amdal (110)*
Pine *Sera (Hem exclusive)*
Sunflower *Sera (Hem exclusive)*
Cobalt *Sera (Hem exclusive)*
Eggshell *Bute Storr*
Sawdust *Bute Storr*
Pebble *Bute Storr*
0361 *Autumn*
0221 *Autumn*
VL30 *Velluto Coex*
Light Grey (RAL 7035) *Leg color*
Pure White (RAL 9010) *Leg color*
Jet Black (RAL 9005) *Leg color*

Modularity
This is a modular product that can be configured freely to fit your needs. Reach out to info@hem.com for assistance

Samples
We supply samples of our material finishes. You can order them directly from hem.com/samples

Graded-in Textile and Made-To-Order
Reach out to your local representative for the full selection of made-to-order options.

Palo 2-seater Chaise Sofa

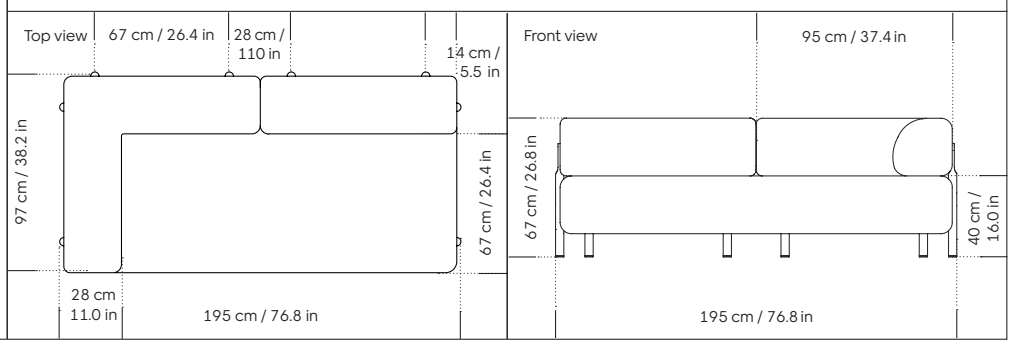

Palo Single-Seater

Design by Hem

Palo is whatever you want it to be; a chaise, an ottoman, a sofa. This is furniture that evolves and grows with you. Elegant wood and metal legs are a hallmark of the architectural Palo family; as well as providing detail, they are the secret to a modular system that allows cushions and armrests to be moved and repositioned across the whole series. It doesn't end there... Want a side table for your tea? Or need to replace an individual element? Our approach enables you to update and grow your system, adapting to whatever life brings.

Upholstery
Amdal
by GU (Norway)
70% Virgin Wool, 30% Viscose
100,000 Martindale
Pilling 4
Lightfastness 5-7
Flame resistance EN 1021: Part 1 & 2, BS 5852: Part 1 & 2 (Crib 5), US Cal. TB 117

Sera
by Rohi (Germany)
94% Virgin Wool, 6% Polyamide
122,000 Martindale
Pilling 4-5
Lightfastness 5-8
Flame resistance EN 1021: Part 1 & 2, BS 5852: Part 1 & 2 (Crib 5), US Cal. TB 117

Bute Storr
by Bute Fabrics (Scotland)
97% Pure New Wool, 3% Nylon
65,000 Martindale
Lightfastness 5 (BS EN ISO 105 – B02)
Flame resistance IMO FTP Code(2010) Annex 1, Part 8, BS 5852: PART 1 & 2 (Crib 5), US Cal. TB 117

Autumn
by Kvadrat (Denmark)
100% Recycled Polyester
50,000 Martindale
Pilling 4-5
Lightfastness 6-7
Flame resistance ASTM E 84 Adhered, ASTM E84 Class A Unadhered, EN 1021: Part 1 & 2, IMO 2010 FTP Code Part 8, US Cal. TB 117-2013

Velluto Coex
by Chioccarello (Italy)
100% Cotton
65,000 Martindale
Pilling 4-5
Lightfastness 5
Flame resistance IMO, 1 IM UNI 9175, EN 1021-1:2006, EN 1021-2:2006, CRIB 5, TB 117:2013

Leg material
Beech wood
Painted

Steel
Powder coated

Inside material
PU foam
Wooden structure

Country of origin
Lithuania

3D model
3D files of all products are available on the product pages on hem.com

Product accessory
Palo Side Table

Tests & certifications
EN 16139:2013 – L2: Extreme use – Furniture – Strength, durability and safety – Requirements for non-domestic seating

Beige
Amdal (350)

Brown-Black
Amdal (280)

Chalk
Amdal (130)

Grey
Amdal (110)

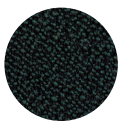

Pine
Sera (Hem exclusive)

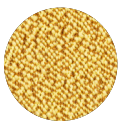

Sunflower
Sera (Hem exclusive)

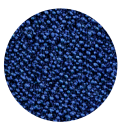

Cobalt
Sera (Hem exclusive)

Eggshell
Bute Storr

Sawdust
Bute Storr

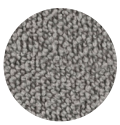

Pebble
Bute Storr

0361
Autumn

0221
Autumn

VL30
Velluto Coex

Light Grey (RAL 7035)
Leg color

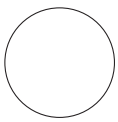

Pure White (RAL 9010)
Leg color

Jet Black (RAL 9005)
Leg color

Modularity
This is a modular product that can be configured freely to fit your needs. Reach out to info@hem.com for assistance

Samples
We supply samples of our material finishes. You can order them directly from hem.com/samples

Graded-in Textile and Made-To-Order
Reach out to your local representative for the full selection of made-to-order options.

Palo Single-seater

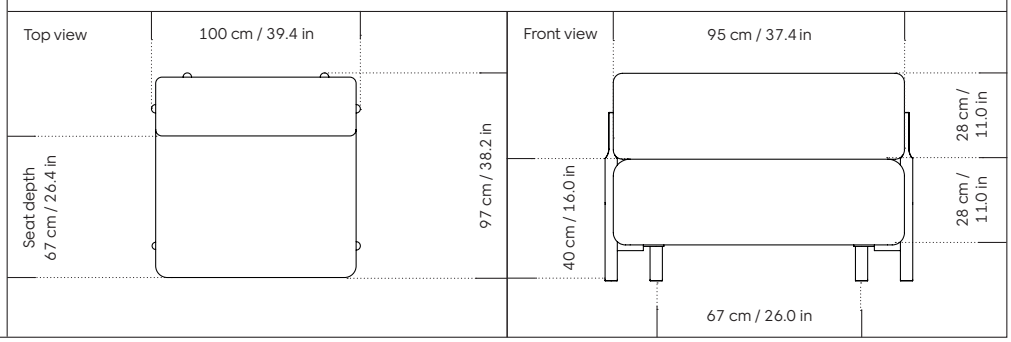

Palo Ottoman

Design by Hem

Palo is whatever you want it to be; a chaise, an ottoman, a sofa. This is furniture that evolves and grows with you. Elegant wood and metal legs are a hallmark of the architectural Palo family; as well as providing detail, they are the secret to a modular system that allows cushions and armrests to be moved and repositioned across the whole series. It doesn't end there... Want a side table for your tea? Or need to replace an individual element? Our approach enables you to update and grow your system, adapting to whatever life brings.

Upholstery
Amdal
by GU (Norway)
70% Virgin Wool, 30% Viscose
100,000 Martindale
Pilling 4
Lightfastness 5-7
Flame resistance EN 1021: Part 1 & 2, BS 5852: Part 1 & 2 (Crib 5), US Cal. TB 117

Sera
by Rohi (Germany)
94% Virgin Wool, 6% Polyamide
122,000 Martindale
Pilling 4-5
Lightfastness 5-8
Flame resistance EN 1021: Part 1 & 2, BS 5852: Part 1 & 2 (Crib 5), US Cal. TB 117

Bute Storr
by Bute Fabrics (Scotland)
97% Pure New Wool, 3% Nylon
65,000 Martindale
Lightfastness 5 (BS EN ISO 105 – B02)
Flame resistance IMO FTP Code(2010) Annex 1, Part 8, BS 5852: PART 1 & 2 (Crib 5), US Cal. TB 117

Autumn
by Kvadrat (Denmark)
100% Recycled Polyester
50,000 Martindale
Pilling 4-5
Lightfastness 6-7
Flame resistance ASTM E 84 Adhered, ASTM E84 Class A Unadhered, EN 1021: Part 1 & 2, IMO 2010 FTP Code Part 8, US Cal. TB 117-2013

Velluto Coex
by Chioccarello (Italy)
100% Cotton
65,000 Martindale
Pilling 4-5
Lightfastness 5
Flame resistance IMO, 1 IM UNI 9175, EN 1021-1:2006, EN 1021-2:2006, CRIB 5, TB 117:2013

Leg material
Beech wood
Painted

Steel
Powder coated

Inside material
PU foam
Wooden structure

Country of origin
Lithuania

3D model
3D files of all products are available on the product pages on hem.com

Product accessory
Palo Side Table

Tests & certifications
EN 16139:2013 – L2: Extreme use – Furniture – Strength, durability and safety – Requirements for non-domestic seating

Beige
Amdal (350)

Brown-Black
Amdal (280)

Chalk
Amdal (130)

Grey
Amdal (110)

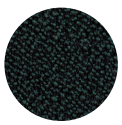

Pine
Sera (Hem exclusive)

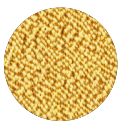

Sunflower
Sera (Hem exclusive)

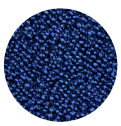

Cobalt
Sera (Hem exclusive)

Eggshell
Bute Storr

Sawdust
Bute Storr

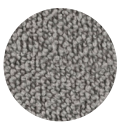

Pebble
Bute Storr

0361
Autumn

0221
Autumn

VL30
Velluto Coex

Light Grey (RAL 7035)
Leg color

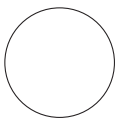

Pure White (RAL 9010)
Leg color

Jet Black (RAL 9005)
Leg color

Modularity
This is a modular product that can be configured freely to fit your needs. Reach out to info@hem.com for assistance

Samples
We supply samples of our material finishes. You can order them directly from hem.com/samples

Graded-in Textile and Made-To-Order
Reach out to your local representative for the full selection of made-to-order options.

Palo Ottoman

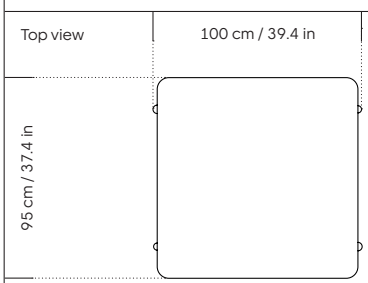

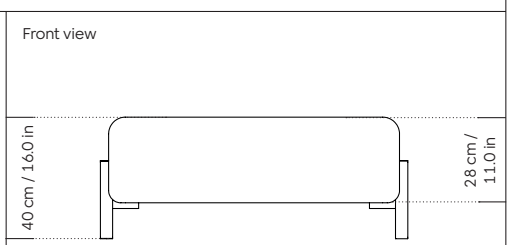

Puffy Sofa

Design by Faye Toogood

Voluminous, plush, instantly recognizable, the Puffy series by Faye Toogood has quickly become a coveted contemporary standard. This stylish seating offers maximum impact and extreme comfort. The Puffy Sofa is a variation on a theme, sharing all the same qualities as its Puffy siblings, but in a size big enough to share. Sink into the extravagant quilt-like upholstery alongside friends, and you can indulge in the reassuring comfort of the plump padding with loved ones. The Puffy family is made up of a generous upholstery cover supported on a rigid steel frame. Our Puffy Sofa is a 2.5 seater, meaning it is compact enough for small spaces, yet luxuriously roomy for a plus-one situation. The Puffy Sofa frame is available in powder-coated or sand-blasted steel finishes and a choice of thick canvas or luxurious leather upholstery.

Upholstery
Disco Coex
by Chioccarello (Italy)
70% Cotton, 20% Acrylic, 5% Viscose, 5% Linen
>50,000 Martindale
Pilling 4-5
Lightfastness 4-5
Flame resistance IMO, 1 IM UNI 9175, EN 1021-1:2006, EN 1021-2:2006, CRIB 5, TB 117:2013

Elmosoft Leather
by Elmo (Sweden)
Scandinavian Grain Leather, Semi-aniline
Lightfastness 6

Bute Storr
by Bute Fabrics (Scotland)
97% Pure New Wool, 3% Nylon
65,000 Martindale
Lightfastness 5 (BS EN ISO 105 – B02)
Flame resistance IMO FTP Code(2010) Annex 1, Part 8, BS 5852: PART 1 & 2 (Crib 5), US Cal. TB 117

Velluto Coex
by Chioccarello (Italy)
100% Cotton
65,000 Martindale
Pilling 4-5
Lightfastness 5
Flame resistance IMO, 1 IM UNI 9175, EN 1021-1:2006, EN 1021-2:2006, CRIB 5, TB 117:2013

Leg material
Steel
Stainless, Sand Blasted
Powder Coated

Inside material
50% PU Foam, 50% Ball Fiber

Country of origin
Lithuania

Tests & certifications
EN 16139:2013 – L2: Extreme use – Furniture – Strength, durability and safety – Requirements for non-domestic seating

Natural
Disco Coex (Number 5)

Anthracite
Disco Coex (Number 26)

Sand Leather*
Elmosoft Leather (02119)

Elmosoft Leather (03009)

Cognac Leather
Elmosoft Leather (54035)

Eggshell
Bute Storr Eggshell

Sawdust
Bute Storr Sawdust

Pebble
Bute Storr Pebble

VL30
Velluto Coex

Stainless
Steel

Black Grey (RAL 7021)
Powder Coated Steel

Cream (RAL 9001)
Powder Coated Steel

*expiring finish

Puffy Sofa Frame

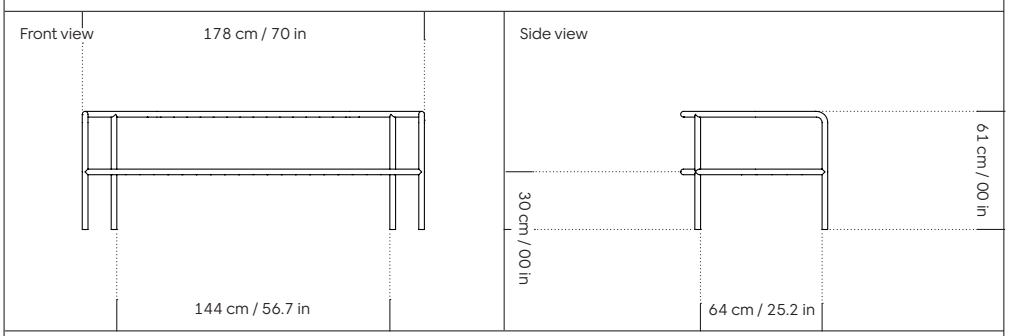

Puffy Sofa Duvet

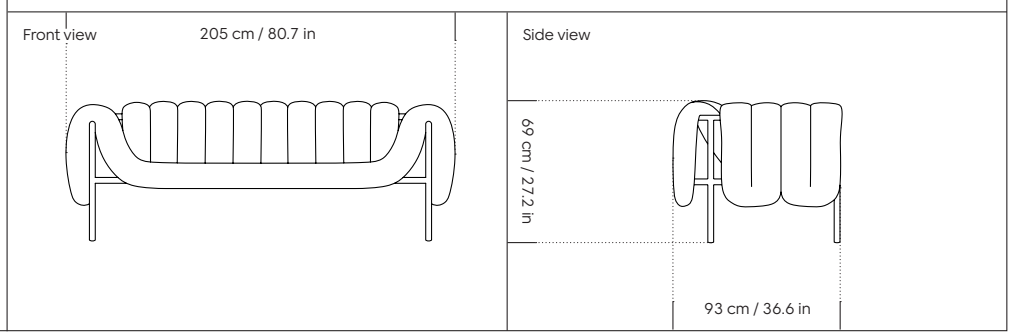

Tables

Side Tables

A great table brings people together. It is something to gather around, to make decisions at, to create an interior statement with. We offer a whole range of these supporting stars, from maximal to minimal.

Alle Coffee Tables

Design by Staffan Holm

The solid-oak and walnut Alle Tables by Staffan Holm are a family of furniture that is especially Hem: traditional modes of making reclaimed for modern manufacture; good looks and practicality given equal consideration; engineering and handwork combined; quality materials used liberally. The circular Alle Coffee Table shares the same key features as the larger members of the family, in particular a softly rounded edge and a clever construction that requires no tools for assembly. Alle means "everyone" in German, and this table is a true reflection of the design principles we cherish. The Alle Coffee Table is available in three different finishes and three different sizes, use them together to create a compelling hard landscape.

Product name	Finish	SKU
Alle Coffee Table Large	Black	12869
	Oak	12971
	Walnut	12878
Alle Coffee Table Medium	Black	12868
	Oak	12865
	Walnut	12877
Alle Coffee Table Small	Black	12867
	Oak	12864
	Walnut	12876

Material
Solid Oak
Quercus Robur
Lacquered

Solid Walnut
Juglans Nigra
Oiled

Wood is a natural material. The color might vary from piece to piece

Country of origin
Poland

3D model
3D files of all products are available on the product pages on hem.com

Always in stock
We keep all our products in stock and ready to ship from our warehouses in the US and EU

Black
Solid Oak

Oak
Solid Oak

Walnut
Solid Walnut

Samples
We supply samples of all our material finishes, order them directly from hem.com/samples

Alle Coffee Table Large

Front view

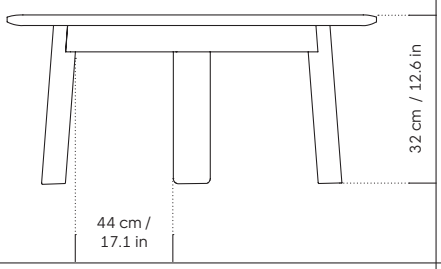

Alle Coffee Table Medium

Front view

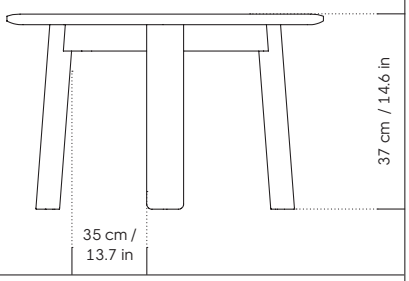

Alle Coffee Table Small

Front view

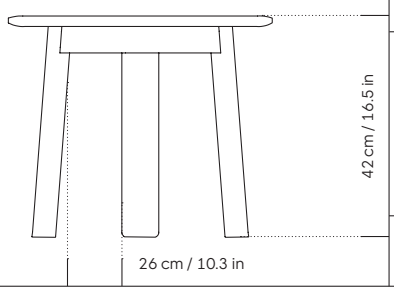

Alle Coffee Table sizes

Top view

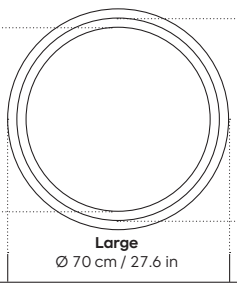

Alle Conference Table Media

Design by Staffan Holm

Staffan Holm repurposed traditional carpentry techniques for the design of the solid-oak Alle Table, which features a structural beam on the underside recalling ancient Japanese temple architecture. In this and many other ways, the Alle Table is especially Hem: traditional modes of making reclaimed for modern manufacture; good looks and practicality given equal consideration; engineering and handwork combined; quality materials used liberally. Alle means “everyone” in German, and this table is a true reflection of the design principles we cherish. The Conference Media variation of the Alle Table comes with media ports and hidden compartments for neat storage and cable management, helping you work more efficiently.

Product name	Finish	SKU
Alle Conference Table 250 cm / 98” Media	Black	30054
	Oak	12861
Alle Conference Table 300 cm / 118” Media	Black	30055
	Oak	13617

Material
Solid Oak
Quercus Robur
Lacquered

Wood is a natural material. The color might vary from piece to piece

Country of origin
Poland

Tests & certifications
EN 15372:2016 – L2: General use – Furniture – Strength, durability and safety – Requirements for non-domestic tables

Always in stock
We keep all our products in stock and ready to ship from our warehouses in the US and EU

Oak
Solid Oak

Black
Solid Oak

Samples
We supply samples of our material finishes. You can order them directly from hem.com/samples

MTO
Please refer to the price list or reach out to your local representative for our made-to-order options

Alle Conference Table Media 250 cm / 98”

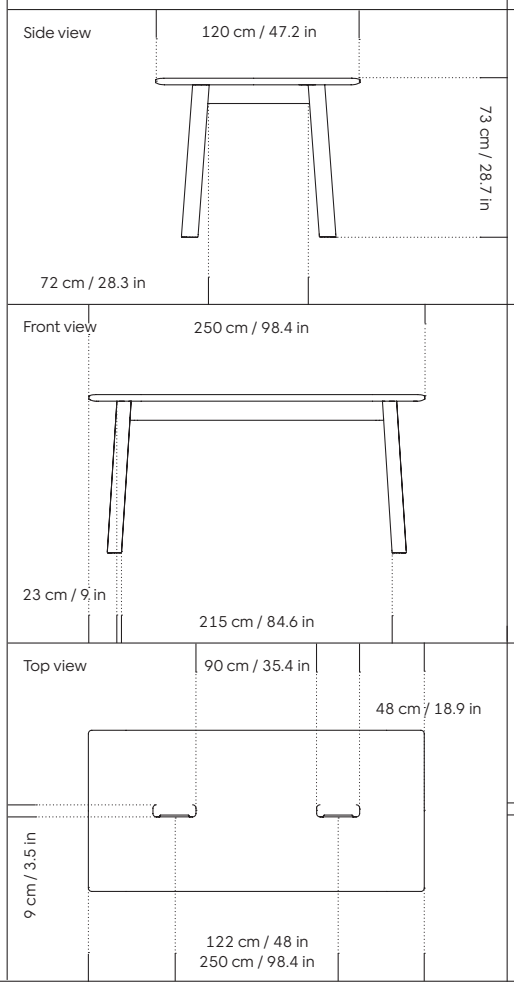

Alle Conference Table Media 300 cm / 118”

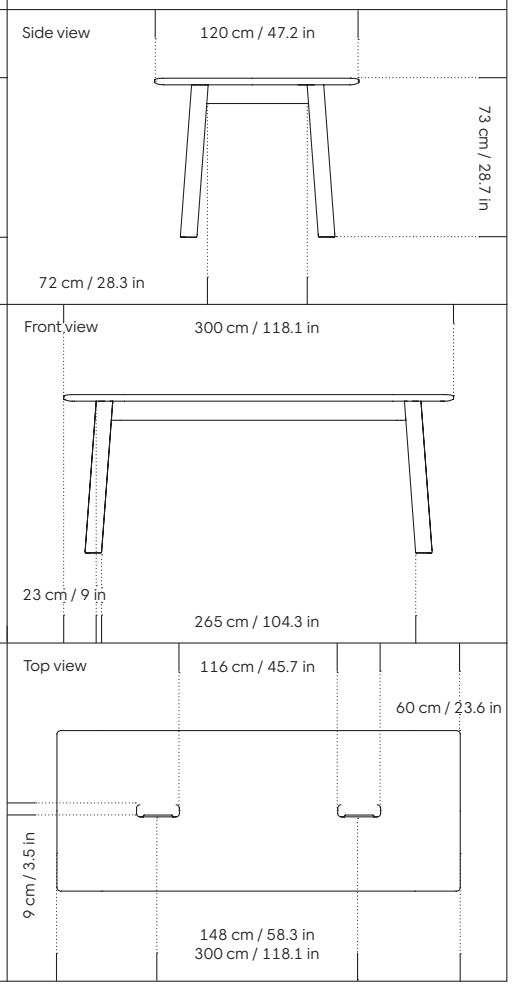

3D model
3D files of all products are available on the product pages on hem.com

Cable tray cutout

Table Top view

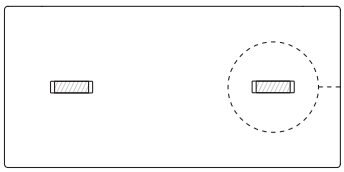

Close up Top View

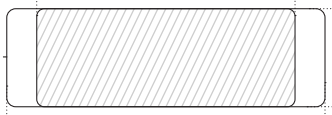

Cable tray dimensions

Top view

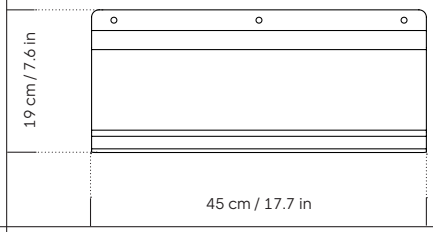

Side view

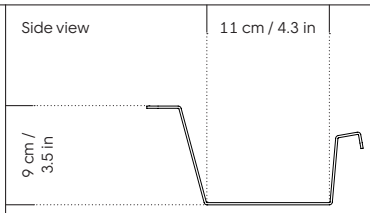

Chairs per table
The Alle Conference Table Media 250 cm / 98" fits up to 6 chairs. We are using the Kendo Swivel Chair 4-star as a reference.

Alle Conference Table Media 250 cm / 98"

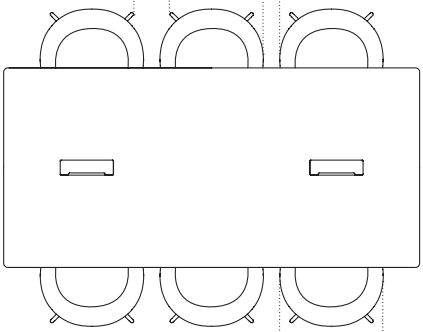

The Alle Conference Table Media 300 cm / 118" fits up to 8 chairs. We are using the Kendo Swivel Chair 4-star as a reference.

Alle Conference Table Media 300 cm / 118"

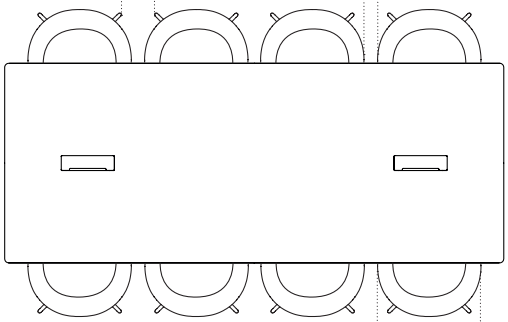

Alle Round Table

Design by Staffan Holm

The solid-oak Alle Tables by Staffan Holm are a family of furniture that is especially Hem: traditional modes of making reclaimed for modern manufacture; good looks and practicality given equal consideration; engineering and handwork combined; quality materials used liberally. The Alle Round Table shares the same key features as the other members of the family, in particular a softly rounded edge and a clever construction that requires no tools for assembly. Alle means “everyone” in German, and this table is a true reflection of the design principles we cherish. The Round Media variation of the Alle Table comes with media ports and hidden compartments for neat storage and cable management, helping you work more efficiently.

Product name	Finish	Finish	SKU
Alle Round Table 150 cm / 59” Media		Oak	30217
		Black	30331
Alle Round Table 150 cm / 59”		Oak	30375
		Black	30376

Material
Solid Oak
Quercus Robur
Lacquered

Wood is a natural material. The color might vary from piece to piece

Country of origin
Poland

Tests & certifications
EN 15372:2016 – L2: General use – Furniture – Strength, durability and safety – Requirements for non-domestic tables

3D model
3D files of all products are available on the product pages on hem.com

Always in stock
We keep all our products in stock and ready to ship from our warehouses in the US and EU

Samples
We supply samples of all our material finishes, order them directly from hem.com/samples

Oak
Solid Oak

Black
Solid Oak

Alle Round Table 150 cm / 59”

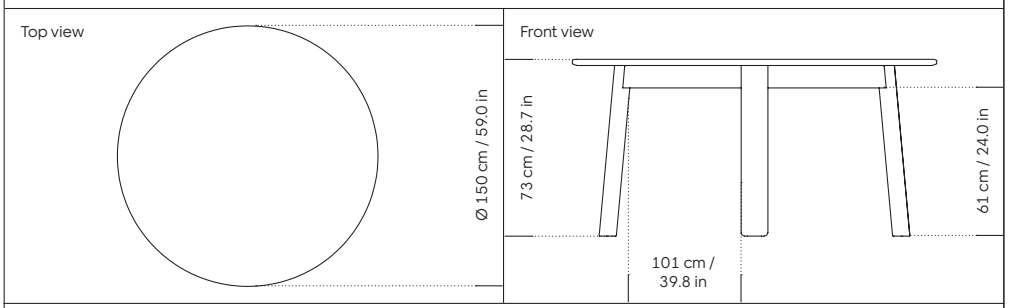

Alle Round Table 150 cm / 59” Media

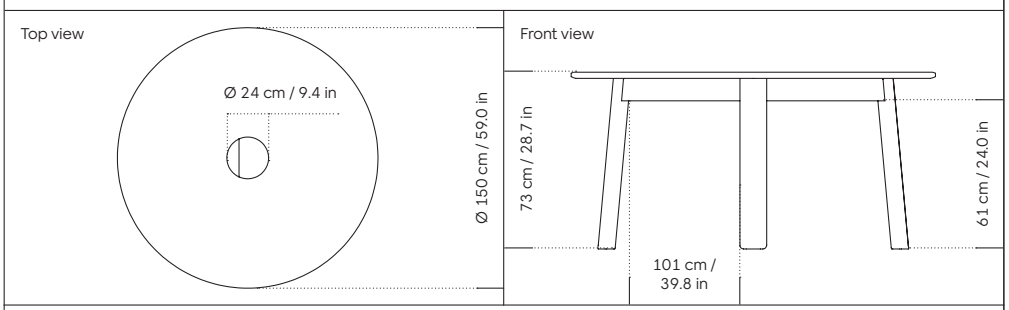

Cable tray dimensions

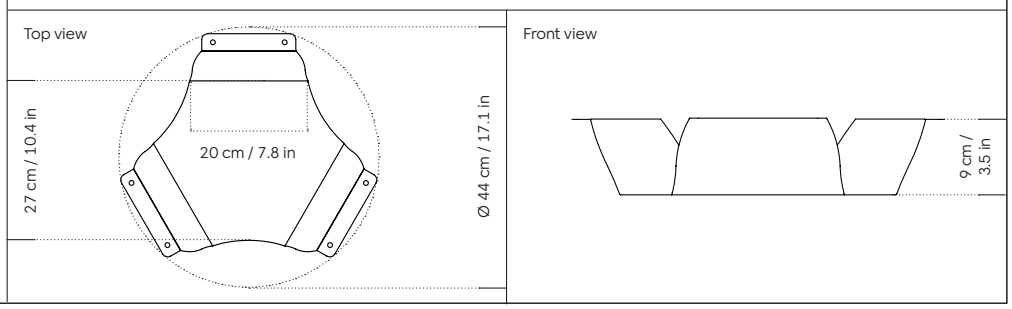

Alle Table

Design by Staffan Holm

Staffan Holm repurposed traditional carpentry techniques for the design of the solid-oak Alle Table, which features a structural beam on the underside recalling ancient Japanese temple architecture. In this and many other ways, the Alle Table is especially Hem: traditional modes of making reclaimed for modern manufacture; good looks and practicality given equal consideration; engineering and handwork combined; quality materials used liberally. Alle means “everyone” in German, and this table is a true reflection of the design principles we cherish.

Product name	Finish	SKU
Alle Table 160 cm / 63”	Black	13736
	Oak	12884
Alle Table 180 cm / 71”	Black	13737
	Oak	12885
Alle Table 220 cm / 86.5”	Black	13738
	Oak	12886
Alle Table 250 cm / 98.5”	Black	30098
	Oak	13197

Material
Solid Oak
Quercus Robur
Lacquered

Wood is a natural material. The color might vary from piece to piece

Country of origin
Poland

Tests & certifications
EN 15372:2016 – L2: General use – Furniture – Strength, durability and safety – Requirements for non-domestic tables

3D model
3D files of all products are available on the product pages on hem.com

Always in stock
We keep all our products in stock and ready to ship from our warehouses in the US and EU

Oak
Solid Oak

Black
Solid Oak

Samples
We supply samples of all our material finishes, order them directly from hem.com/samples

Alle Table

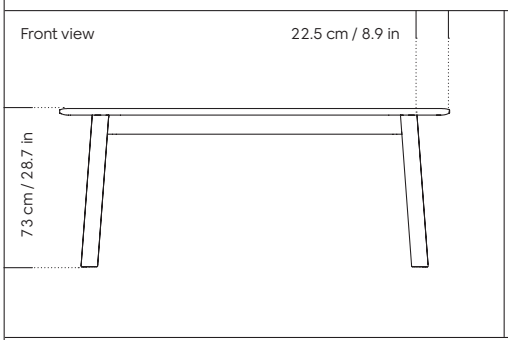

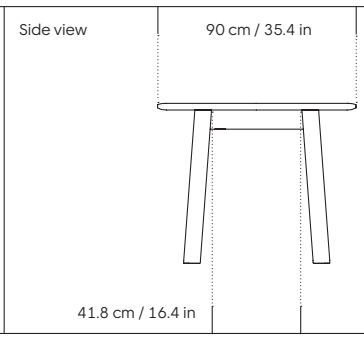

Alle Table sizes

Alle Table 160 cm / 63”

Front view

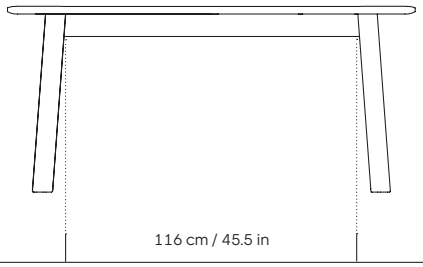

Alle Table 180 cm / 71”

Front view

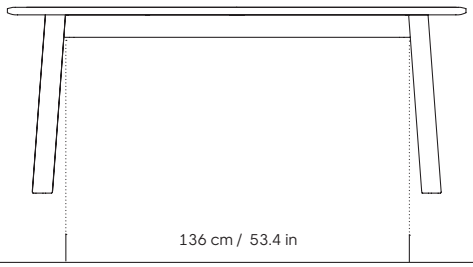

Alle Table 220 cm / 86.5”

Front view

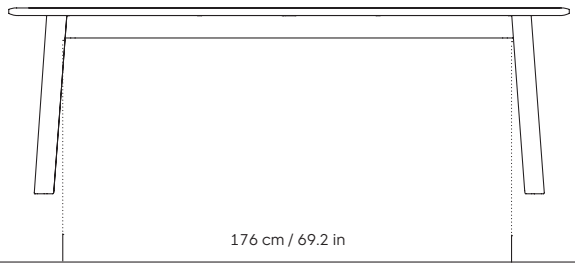

Alle Table 250 cm / 98.5”

Front view

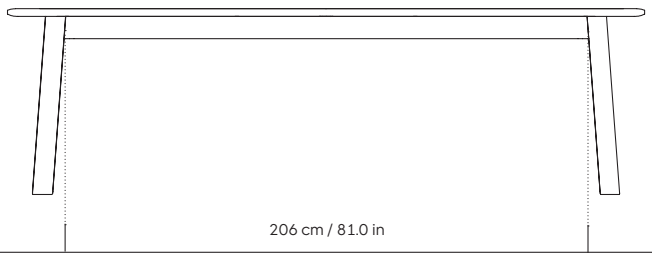

Bookmatch Table

Design by Philippe Malouin

The Bookmatch Table by Philippe Malouin channels the natural beauty of freshly sawn timber. It celebrates craftsmanship, and yet is a design for modern manufacture and contemporary living. Featuring two perfectly mirrored wood veneer boards with edges engineered to give a waney (untrimmed) effect and a construction that locks with two wooden wedges, the Bookmatch Table is a perfectly considered homage to traditional carpentry skills. Visually hefty, although actually light, and seemingly raw and crafted, but in reality highly engineered, the Bookmatch Table is a sophisticated piece of furniture for design devotees.

Material
Oak Veneer
Quercus Robur
Lacquered

Walnut Veneer
Juglans Nigra
Lacquered

Wood is a natural material. The color might vary from piece to piece

Country of origin
Estonia

Tests & certifications
Bookmatch Tables Oak: EN 15372:2016 – L2: General use. Furniture – Strength, durability and safety – Requirements for non-domestic tables.

Oak
Oak Veneer

Walnut
Walnut Veneer

Samples
We supply samples of our material finishes. You can order them directly from hem.com/samples

MTO
Please refer to the price list or reach out to your local representative for our made-to-order options

Bookmatch Table 220 cm / 86.6”

Front view

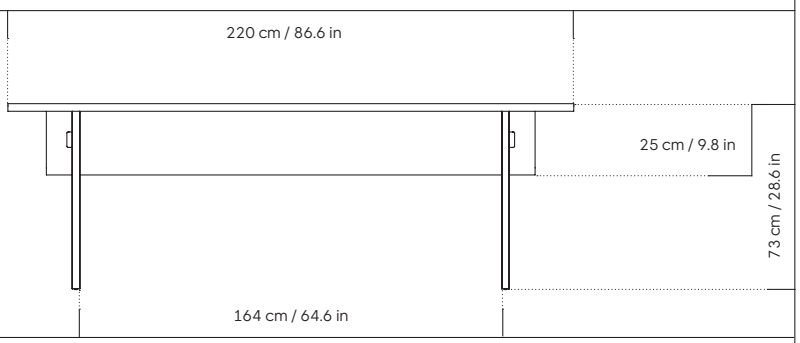

Bookmatch Table 275 cm / 108.3”

Front view

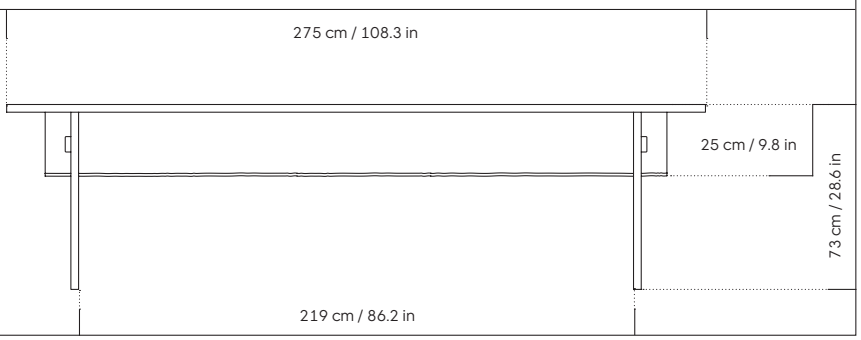

3D model
3D files of all products are available on the product pages on hem.com

Bookmatch Table sizes

Top view

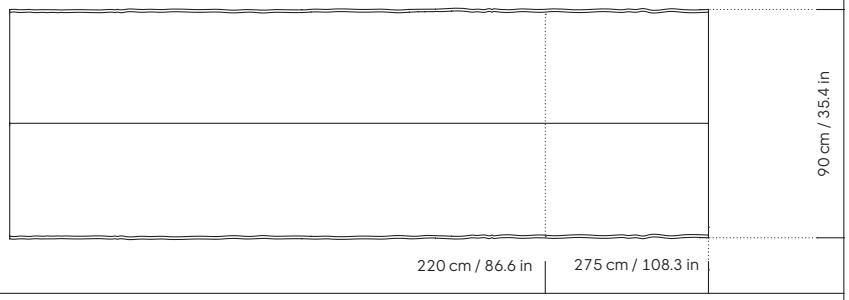

Chairs per table
The Bookmatch Table 220 cm / 86.6" fits up to 6 chairs. We are using the Udon Chair as a reference.

Bookmatch Table 220 cm / 86.6"

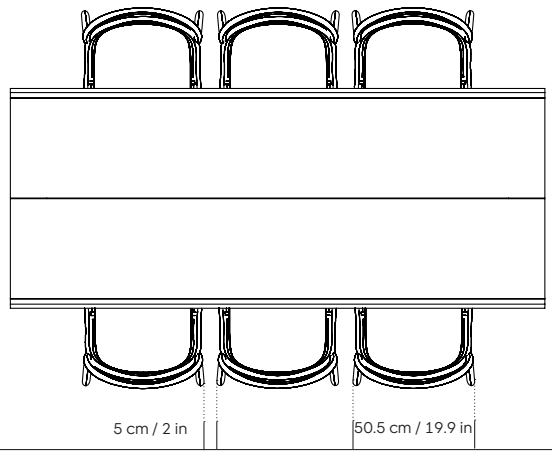

The Bookmatch Table 275 cm / 108.3" fits up to 8 chairs. We are using the Udon Chair as a reference.

Bookmatch Table 275 cm / 108.3"

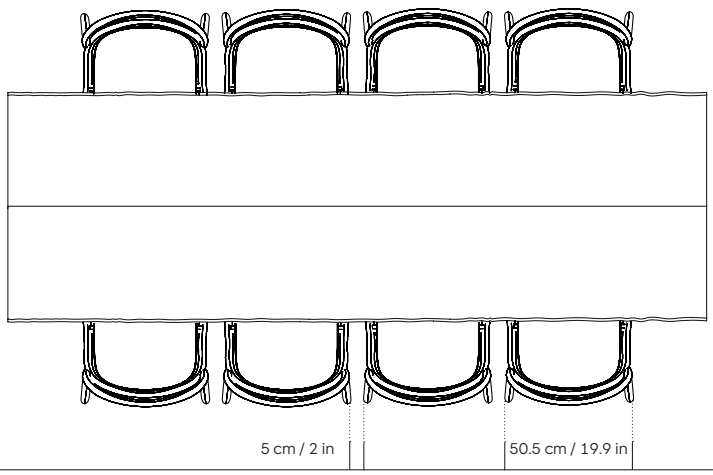

Bookmatch Bench

Design by Philippe Malouin

The Bookmatch Bench by Philippe Malouin channels the natural beauty of freshly sawn timber. It celebrates craftsmanship, and yet is a design for modern manufacture and contemporary living. Featuring a perfectly mirrored wood veneer board with edges engineered to give a waney (untrimmed) effect and a construction that locks with two wooden wedges, the Bookmatch Bench is a perfectly considered homage to traditional carpentry skills. Visually hefty, although actually light, and seemingly raw and crafted, but in reality highly engineered, the Bookmatch Bench is a sophisticated piece of furniture for design devotees.

Material
Oak Veneer
Quercus Robur
Lacquered

Walnut Veneer
Juglans Nigra
Lacquered

Wood is a natural material. The color might vary from piece to piece

Country of origin
Estonia

3D model
3D files of all products are available on the product pages on hem.com

Oak
Oak Veneer

Walnut
Walnut Veneer

Samples
We supply samples of our material finishes. You can order them directly from hem.com/samples

MTO
Please refer to the price list or reach out to your local representative for our made-to-order options

Bookmatch Bench

Front view

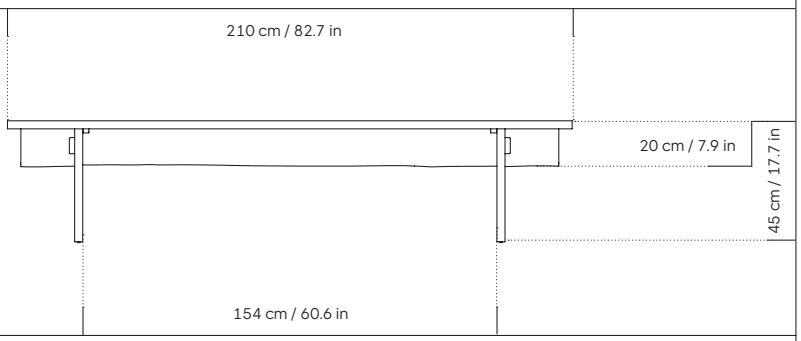

Bookmatch Bench

Side view

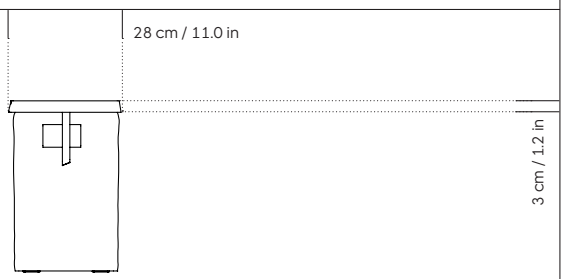

Chop Table Round

Design by Philippe Malouin

The Chop Table by Philippe Malouin is an evergreen design conceived for use in a range of public and private outdoor spaces. Intentionally simple, in both construction and aesthetics, the Chop collection reimagines classic archetypes to create pieces that are immediately recognizable, yet pleasingly unknown. The Chop table has a central rectangular column and a four-pronged base. It is heavily influenced by Malouin's work in the art world, where he often utilizes hand-led industrial techniques to develop elegant paired-back forms. The table is available with a square or round top, and is suitable for a range of different spaces and layouts. Chop is made from a durable stainless steel, and is available in a powder-coated colored finish.

Color variants material
Stainless Steel
Powder Coated

Product weight
22 kg / 48.5 lb

Country of origin
Poland

Tests & certifications
EN 15372:2016 – L2: General use - Furniture – Strength, durability and safety – Requirements for non-domestic tables

ANSI/BIFMA X5.5-2021 American National Standard For Office Furnishings – Desk and Table Products

3D model
3D files of all products are available on the product pages on hem.com

Beige (RAL 1001)
Powder Coated Steel

Black Green (RAL 6012)
Powder Coated Steel

Grey White (RAL 9002)
Powder Coated Steel

Ultramarine Blue (RAL 5002)
Powder Coated Steel

MTO
Please refer to the price list or reach out to your local representative for our made-to-order options

Chop Table Round

Front view

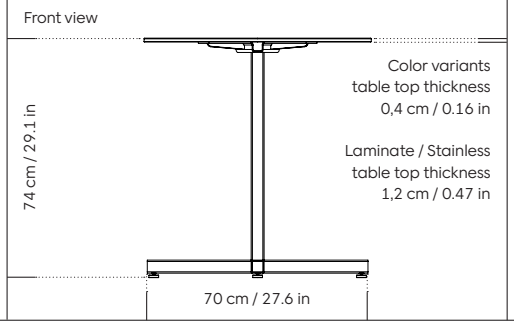

Top view

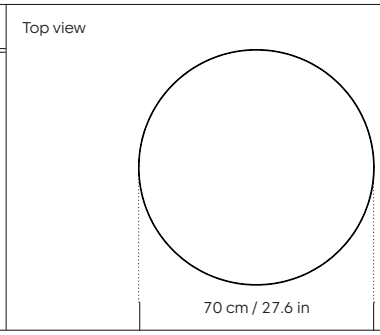

Chop Table Square

Design by Philippe Malouin

The Chop Table by Philippe Malouin is an evergreen design conceived for use in a range of public and private outdoor spaces. Intentionally simple, in both construction and aesthetics, the Chop collection reimagines classic archetypes to create pieces that are immediately recognizable, yet pleasingly unknown. The Chop table has a central rectangular column and a four-pronged base. It is heavily influenced by Malouin's work in the art world, where he often utilizes hand-led industrial techniques to develop elegant paired-back forms. The table is available with a square or round top, and is suitable for a range of different spaces and layouts. Chop is made from a durable stainless steel, and is available in a powder-coated colored finish.

Color variants material
Stainless Steel
Powder Coated

Product weight
25 kg / 55.1 lb

Country of origin
Poland

Tests & certifications
EN 15372:2016 – L2: General use - Furniture – Strength, durability and safety – Requirements for non-domestic tables

ANSI/BIFMA X5.5-2021 American National Standard For Office Furnishings – Desk and Table Products

3D model
3D files of all products are available on the product pages on hem.com

Beige (RAL 1001)
Powder Coated Steel

Black Green (RAL 6012)
Powder Coated Steel

Grey White (RAL 9002)
Powder Coated Steel

Ultramarine Blue (RAL 5002)
Powder Coated Steel

MTO
Please refer to the price list or reach out to your local representative for our made-to-order options

Chop Table Square

Front view

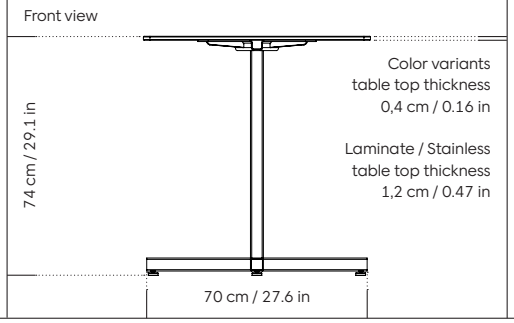

Top view

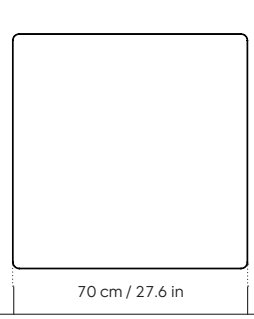

Chop Table Rectangular

Design by Philippe Malouin

The Chop Table Rectangular by Philippe Malouin is an evergreen design conceived for use in a range of public and private outdoor spaces. Intentionally simple, in both construction and aesthetics, the Chop collection reimagines classic archetypes to create pieces that are immediately recognizable, yet pleasingly unknown. The Chop Table Rectangular has two central square columns and two-pronged bases. It is heavily influenced by Malouin's work in the art world, where he often utilizes hand-led industrial techniques to develop elegant paired-back forms. Chop Table Rectangular is made from a durable stainless steel and comes in a powder-coated colored finish.

Color variants material
Powder Coated

Stainless variant material
Leg material
Stainless Steel

Table top material
Stainless Steel

Product weight
49 kg / 108 lb

Country of origin
Poland

Tests & certifications
EN 15372:2016 – L2: General use - Furniture – Strength, durability and safety – Requirements for non-domestic tables

ANSI/BIFMA X5.5-2021 American National Standard For Office Furnishings – Desk and Table Products

3D model
3D files of all products are available on the product pages on hem.com

Black Green (RAL 6012)
Powder Coated Steel

MTO
Reach out to your local representative for the full selection of made-to-order options.

Chop Table Square

Side view

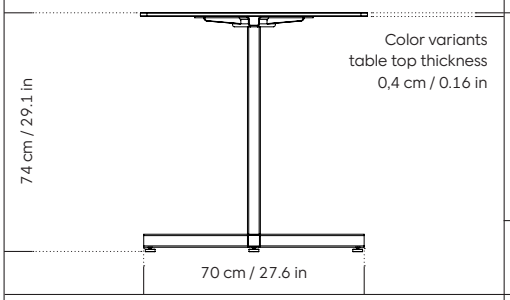

Top view

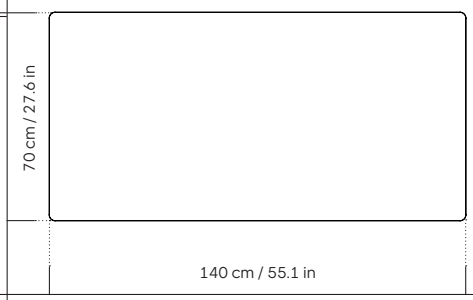

Front view

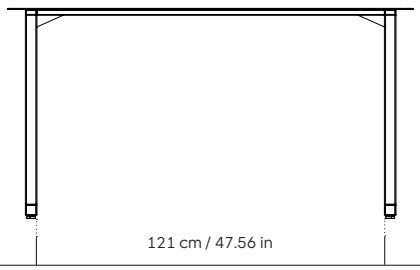

Chop Bar Table

Design by Philippe Malouin

The Chop Table by Philippe Malouin is an evergreen design conceived for use in a range of public and private outdoor spaces. Intentionally simple, in both construction and aesthetics, the Chop collection reimagines classic archetypes to create pieces that are immediately recognizable, yet pleasingly unknown. The Chop table has a central rectangular column and a four-pronged base. It is heavily influenced by Malouin's work in the art world, where he often utilizes hand-led industrial techniques to develop elegant paired-back forms. The table is suitable for a range of different spaces and layouts. Chop is made from a durable stainless steel, and is available in a powder-coated colored finish.

Color variants material
Stainless Steel
Powder Coated

Product weight
8 kg / 17.6 lb

Country of origin
Poland

Tests & certifications
EN 16139:2013 – L2: Extreme use - Furniture - Strength durability and safety - Requirements for non-domestic seating

ANSI/BIFMA X5.1-2017 American National Standard For Office Furnishings – General Purpose Office Chairs

3D model
3D files of all products are available on the product pages on hem.com

Black Green (RAL 6012)
Powder Coated Steel

MTO
Please refer to the price list or reach out to your local representative for our made-to-order options

Chop Bar Table Round

Front view

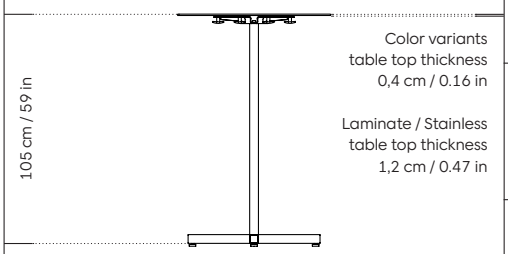

Color variants
table top thickness
0,4 cm / 0.16 in

Laminate / Stainless
table top thickness
1,2 cm / 0.47 in

Top view

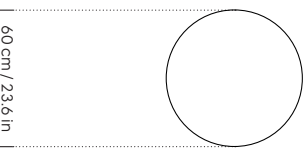

Chop Counter Table

Design by Philippe Malouin

The Chop Table by Philippe Malouin is an evergreen design conceived for use in a range of public and private outdoor spaces. Intentionally simple, in both construction and aesthetics, the Chop collection reimagines classic archetypes to create pieces that are immediately recognizable, yet pleasingly unknown. The Chop table has a central rectangular column and a four-pronged base. It is heavily influenced by Malouin's work in the art world, where he often utilizes hand-led industrial techniques to develop elegant paired-back forms. The table is suitable for a range of different spaces and layouts. Chop is made from a durable stainless steel, and is available in a powder-coated colored finish.

Color variants material
Stainless Steel
Powder Coated

Product weight
8 kg / 17.6 lb

Country of origin
Poland

Tests & certifications
EN 16139:2013 – L2: Extreme use - Furniture - Strength durability and safety - Requirements for non-domestic seating

ANSI/BIFMA X5.1-2017 American National Standard For Office Furnishings – General Purpose Office Chairs

3D model
3D files of all products are available on the product pages on hem.com

Black Green (RAL 6012)
Powder Coated Steel

MTO
Please refer to the price list or reach out to your local representative for our made-to-order options

Chop Counter Table Round

Front view

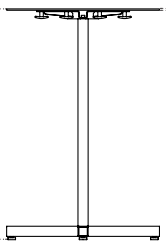

Color variants
table top thickness
0,4 cm / 0.16 in

Laminate / Stainless
table top thickness
1,2 cm / 0.47 in

Top view

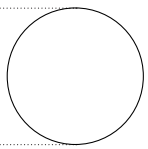

Log Table

Design by Julien Renault

The Log Table is archetypal, its clean lines and refined silhouette contrived by designer Julien Renault, whose intention was to make a quintessential table for work or play. Its streamlined design cleverly conceals its engineering: a veneer-covered honeycomb core keeps the tabletop light, allowing it to span a great distance. Purposefully robust legs anchor the table and give it stability, and their simple screw connections make assembly straightforward. The ever-so-pleasing curved edge and rounded lines of the legs gently soften the overall effect.

Tabletop Material
Oak Veneer
Quercus Robur
Lacquered

Walnut Veneer
Juglans Nigra
Lacquered

Leg Material
Solid Oak
Quercus Robur
Lacquered

Solid Walnut
Juglans Nigra
Lacquered

Wood is a natural material why the color may vary slightly from piece to piece

Country of origin
Estonia

Tests & certifications
EN 15372:2016 – L2: General use – Furniture – Strength, durability and safety – Requirements for non-domestic tables

3D model
3D files of all products are available on the product pages on hem.com

Oak
Oak Veneer / Solid Oak

Walnut
Walnut Veneer / Solid Walnut

Samples
We supply samples of our material finishes. You can order them directly from hem.com/samples

MTO
Please refer to the price list or reach out to your local representative for our made-to-order options

Log Table

Front view

Log Table sizes

Top view

Log Table

Side view

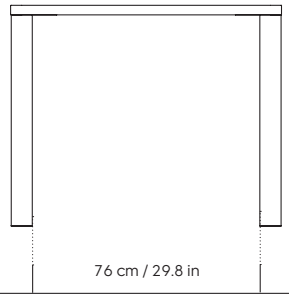

Log Table 140 cm / 55”

Front view

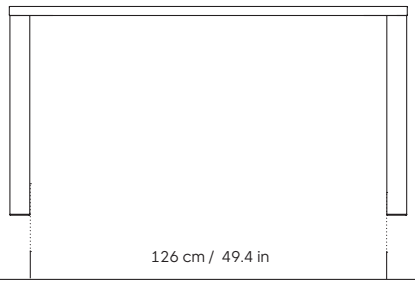

Log Table 180 cm / 71”

Front view

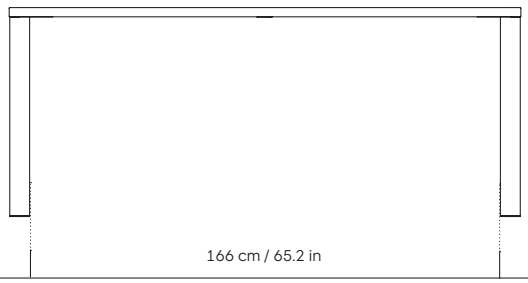

Log Table 220 cm / 86.5”

Front view

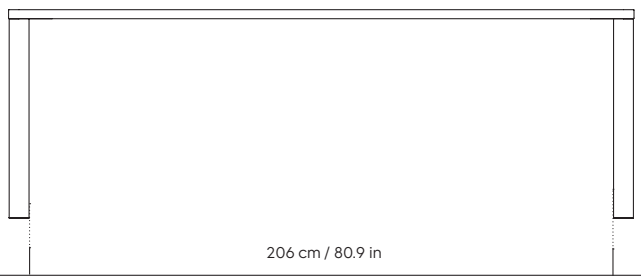

Chairs per table
The Log Table 140 cm / 55" fits up to 4 chairs.
We are using the Udon Chair as a reference.

Log Table 140 cm / 55"

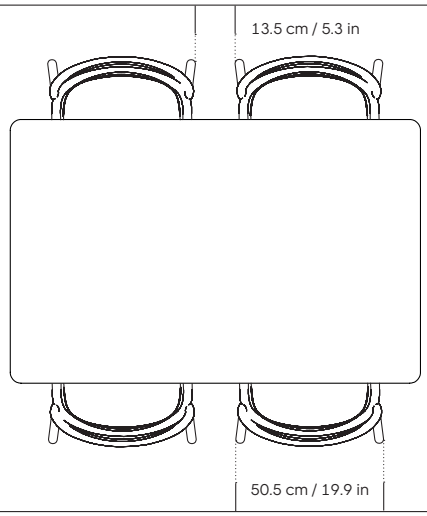

The Log Table 180 cm / 71" fits up to 6 chairs.
We are using the Udon Chair as a reference.

Log Table 180 cm / 71"

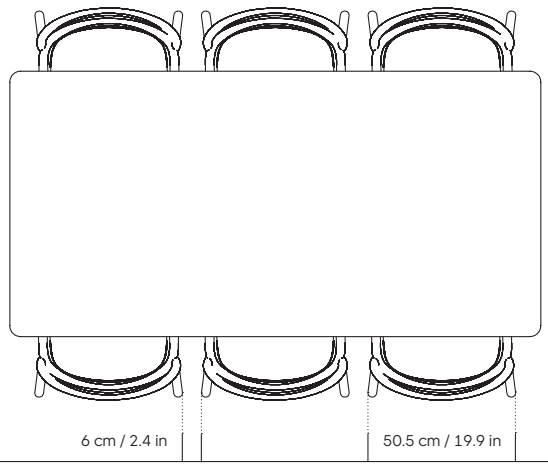

The Log Table 220 cm / 86.5" fits up to 6 chairs.
We are using the Udon Chair as a reference.

Log Table 220 cm / 86.5"

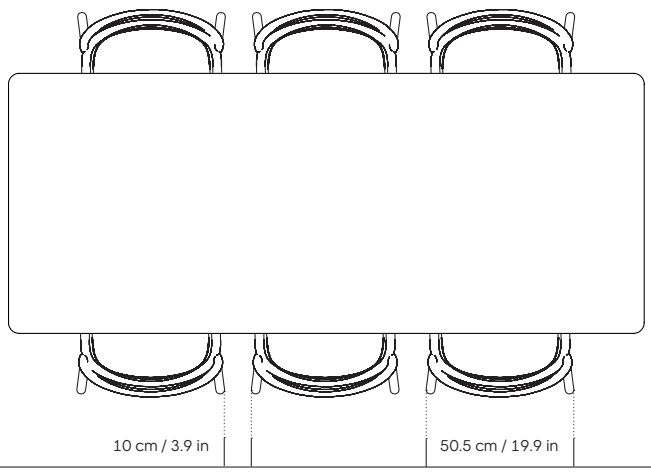

Lolly Side Table

Design by Pauline Deltour

The Lolly Side Table is the perfect grab-and-go piece of furniture. Although diminutive in stature, the Lolly is big in versatility and character. Place it next to sofas as a prop for your cup of tea or book, beside beds and armchairs or as an impromptu laptop stand. Most of all make use of its mobile nature; Lolly can be wherever you need it to be. The table's leg is hollow, meaning you can hide messy lamp or charging cables within it and its foot is designed to slide beneath your sofa or chair so that Lolly hugs the side of your furniture, saving space and integrating effortlessly. Lolly is made from sheet steel and is available in a powder-coated finish as well as a unique ripple-effect textured finish for added interest and extra durability.

Material
Carbon steel
Gloss Leatherette Powder Coat
Powder Coated

Country of origin
Italy

Black Green Leatherette (RAL 6012)
Powder Coated Carbon Steel

Ochre Yellow Leatherette (RAL 1024)
Powder Coated Carbon Steel

Pure White Leatherette (RAL 9010)
Powder Coated Carbon Steel

Traffic Red Leatherette (RAL 3020)
Powder Coated Carbon Steel

Black Grey (RAL 7021)
Powder Coated Carbon Steel

Cream (RAL 9001)
Powder Coated Carbon Steel

Samples
We supply samples of our material finishes. You can order them directly from hem.com/samples

MTO
Please refer to the price list or reach out to your local representative for our made-to-order options

Lolly Side Table

Side view

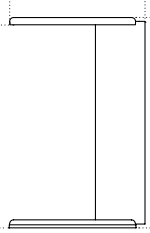

Max Table

Design by Max Lamb

There can be little doubt that the Max Table is furniture that will endure. Boasting extreme length and made from solid ash, this extraordinary and uncompromising design is closer to architecture than object. Designer Max Lamb was given the brief to make a table so strong and so generous, it could be stood upon. He delivered a design that is monolithic, bold, and consequential. Huge in scale, elementary in form, brilliant in construction, the Max Table (and its partner, the Max Bench) will be your home's centerpiece—the hub around which you and yours gather for generations to come

Product name	Finish	SKU	Product name	Finish	SKU
Max Table 300 cm / 118 in	Ash	30600	**Max Table 300 cm / 118 in**	Black Stained Ash	31700
Max Table 250 cm / 98.4 in	Ash	30604	**Max Table 250 cm / 98.4 in**	Black Stained Ash	31710

Material
Solid Ash
Fraxinus Excelsior
Clear Lacquered
Black Stained

Wood is a natural material. The color might vary from piece to piece.

Country of origin
Poland

3D model
3D files of all products are available on the product pages on hem.com

Product accessory
Max Bench 300 cm / 118 in
Max Bench 250 cm / 98.4 in

Always in stock
We keep all our products in stock and ready to ship from our warehouses in the US and EU

Ash
Solid Ash

Ash
Black Stained

Samples
We supply samples of our material finishes. You can order them directly from hem.com/samples

MTO
Please refer to the price list or reach out to your local representative for our made-to-order options

Max Table 300 cm / 118 in

Top view

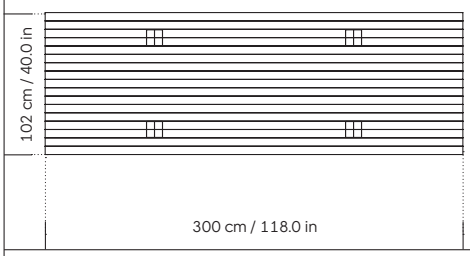

Side view

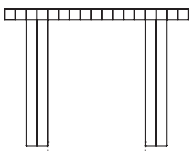

Front view

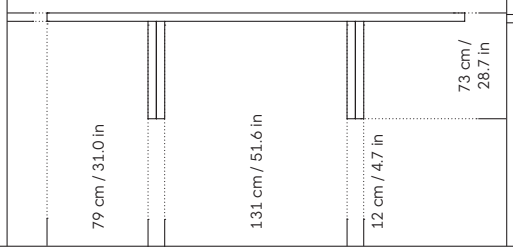

Max Table 250 cm / 98.4 in

Top view

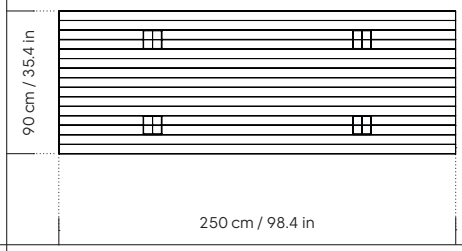

Side view

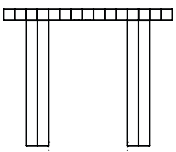

Front view

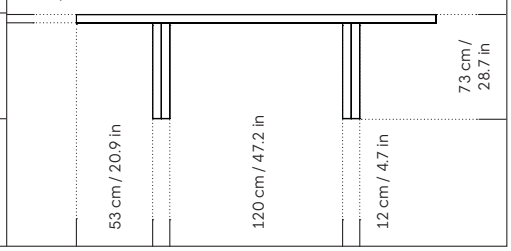

Chair per table The Max Table fits up to 8 chairs. We are using the Udon Chair as reference.	**Max Table 300 cm / 118 in**	**Max Table 250 cm / 98.4 in**
	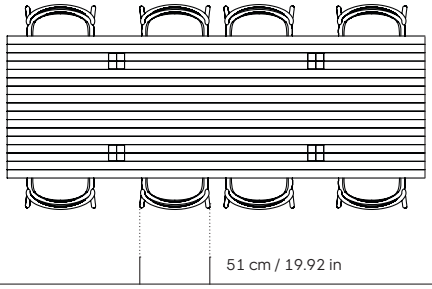	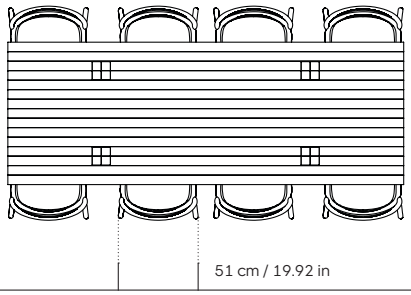

Max Bench

Design by Max Lamb

Just like the Max Table, to which this seat is a partner, the Max Bench is a formidable piece of furniture: huge in scale, elementary in form, brilliant in construction, and made from solid ash. Use the bench as it was intended—alongside the Max Table for a fierce dining set—or be unconventional and use it as a monumental stand-alone piece on which to sit, store books, or display favorite possessions. The Max furniture family embodies its name in every way. Created by one of contemporary design's finest talents, Max Lamb.

Product name	Finish	SKU	Product name	Finish	SKU
Max Bench 300 cm / 118 in	Ash	30387	**Max Bench 300 cm / 118 in**	Black Stained Ash	31703
Max Bench 250 cm / 98.4 in	Ash	30608	**Max Bench 250 cm / 98.4 in**	Black Stained Ash	31706

Material
Solid Ash
Fraxinus Excelsior
Clear Lacquered
Black Stained

Wood is a natural material. The color might vary from piece to piece

Country of origin
Poland

3D model
3D files of all products are available on the product pages on hem.com

Product accessory
Max Table 300 cm / 118 in
Max Table 250 cm / 98.4 in

Always in stock
We keep all our products in stock and ready to ship from our warehouses in the US and EU

Ash
Solid Ash

Ash
Black Stained

Samples
We supply samples of our material finishes. You can order them directly from hem.com/samples

MTO
Please refer to the price list or reach out to your local representative for our made-to-order options

Max Bench 300 cm / 118 in

Top view

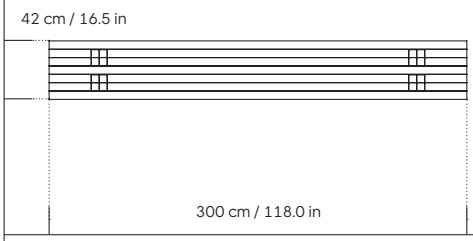

Side view

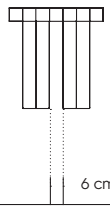

Front view

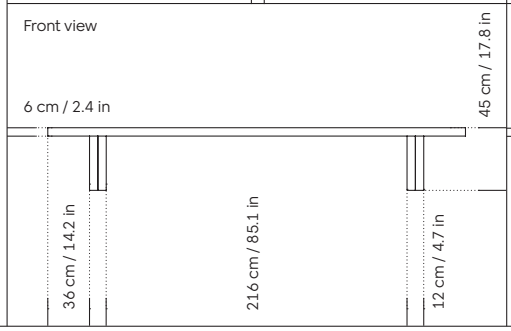

Max Bench 250 cm / 98.4 in

Top view

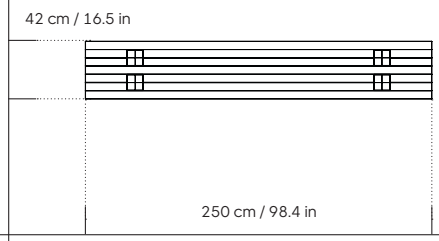

Side view

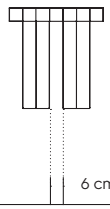

Front view

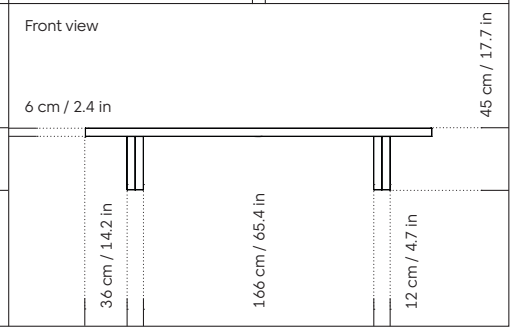

Worm Coffee Table

Design by Soft Baroque

Effortless additions to any interior, the Worm family of occasional tables is a certified crowd pleaser. Soft Baroque has created three solid wood tabletops for this playful series, their real-life shapes inspired by digital drawing tools. Worm Tables can feel classic or fresh depending on their context, with solid wood legs taking the design in a refined and tactile direction. Use Worm alone as a hero side table or en masse for a landscape of expressive surface space. This light-on-its-feet table brings an accent of easy charm to any room. Worm tabletops are available in three shapes and two wood finishes: natural beech and brown stain, and are paired with solid wood legs.

Material
Solid Beech
Acrylic lacquer

Country of origin
Poland

Tests & certifications
EN 15372:2016 – L2: General use - Furniture – Strength, durability and safety – Requirements for non-domestic tables, FSC 100%

Beech
Natural Lacquered

Brown
Brown Stained

Worm Coffee Table Large - Table top

Top view

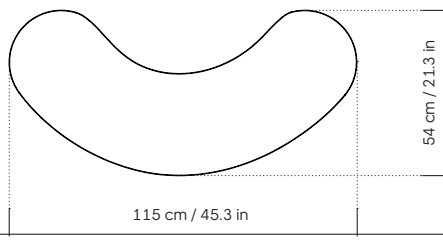

Worm Coffee Table Large - Wood legs

Front view

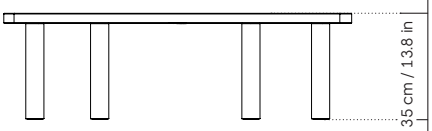

Worm Coffee Table Round

Design by Soft Baroque

Effortless additions to any interior, the Worm family of occasional tables is a certified crowd pleaser. Soft Baroque has created three solid wood tabletops for this playful series, their real-life shapes inspired by digital drawing tools. Worm Tables can feel classic or fresh depending on their context, with solid wood legs taking the design in a refined and tactile direction. Use Worm alone as a hero side table or en masse for a landscape of expressive surface space. This light-on-its-feet table brings an accent of easy charm to any room. Worm tabletops are available in three shapes and two wood finishes: natural beech and brown stain, and are paired with solid wood legs.

Material
Solid Beech
Acrylic lacquer

Country of origin
Poland

Tests & certifications
EN 15372:2016 – L2: General use - Furniture – Strength, durability and safety – Requirements for non-domestic tables, FSC 100%

Beech
Natural Lacquered

Brown
Brown Stained

Worm Coffee Table Round - Table top

Top view

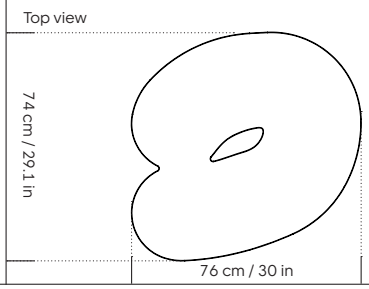

Worm Coffee Table Round - Wood legs

Front view

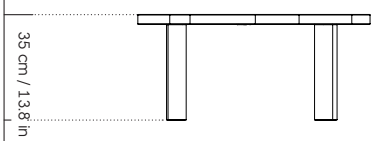

Worm Coffee Table Small

Design by Soft Baroque

Effortless additions to any interior, the Worm family of occasional tables is a certified crowd pleaser. Soft Baroque has created three solid wood tabletops for this playful series, their real-life shapes inspired by digital drawing tools. Worm Tables can feel classic or fresh depending on their context, with solid wood legs taking the design in a refined and tactile direction. Use Worm alone as a hero side table or en masse for a landscape of expressive surface space. This light-on-its-feet table brings an accent of easy charm to any room. Worm tabletops are available in three shapes and two wood finishes: natural beech and brown stain, and are paired with solid wood legs.

Material
Solid Beech
Acrylic lacquer

Country of origin
Poland

Tests & certifications
EN 15372:2016 – L2: General use - Furniture – Strength, durability and safety – Requirements for non-domestic tables, FSC 100%

Beech
Natural Lacquered

Brown
Brown Stained

Worm Coffee Table Small - Table top

Top view

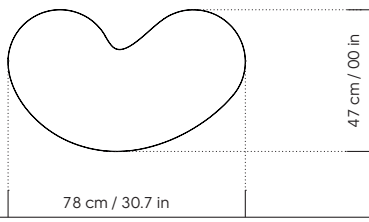

Worm Coffee Table Small - Wood legs

Front view

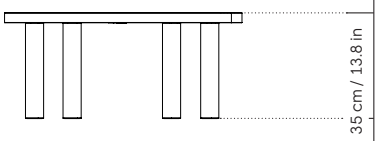

Lighting

How to light your home or workspace is one of the most consequential interior decisions. We've created systems that allow our customers to take the lead and create their own lighting designs and compositions.

Alphabeta Floor Lamp

Design by Luca Nichetto

Variety and flexibility are at the heart of the modular Alphabeta lighting system by Luca Nichetto. Eight different shade shapes in eight powder-coated colors equate to a plethora of possibilities—1024 to be exact. Whatever your aesthetic, from strict and somber all-black to playful and flamboyant color combinations, sharp lines or voluptuous forms, Alphabeta can accommodate them all. Alphabeta are bidirectional—meaning they emit light from both the top and the bottom of the shade—so that you need not choose between spotlight and ambient light but can enjoy both. The Alphabeta Floor Lamp consists of our modular shade on top of a slender, gently angled metal stand. The stand is weighted for stability and adjustable for ultimate accurate control. Every turned-steel shade and milled part is made in Italy.

Product name	Finish	SKU
Alphabeta Floor Lamp Base (EU)	Black	20034
Alphabeta Floor Lamp Base (UK)	Black	20076
Alphabeta Floor Lamp Base (US)	Black	20091
Alphabeta Shade Cone Large	Jet Black	13313
Alphabeta Shade Cone Large	Signal White	13314
Alphabeta Shade Cone Large	Luminous Green	20253
Alphabeta Shade Cone Large	Silk Grey	20252
Alphabeta Shade Cone Small	Jet Black	13309
Alphabeta Shade Cone Small	Signal White	13310
Alphabeta Shade Cone Small	Soft Blue	20368
Alphabeta Shade Cone Small	Sulfur Yellow	20369
Alphabeta Shade Cone Tall	Jet Black	13306
Alphabeta Shade Cone Tall	Signal White	13307
Alphabeta Shade Cone Tall	Beige	20254
Alphabeta Shade Cone Tall	Ultramarine Blue	20255
Alphabeta Shade Round Cylinder	Jet Black	13322
Alphabeta Shade Round Cylinder	Light Pink	20008
Alphabeta Shade Round Cylinder	Signal White	13323
Alphabeta Shade Round Cylinder	Luminous Green	20370
Alphabeta Shade Round Large	Jet Black	13300
Alphabeta Shade Round Large	Signal White	13301
Alphabeta Shade Round Large	Ultramarine Blue	20256
Alphabeta Shade Round Large	Beige	20257
Alphabeta Shade Round Medium	Jet Black	13319
Alphabeta Shade Round Medium	Signal White	13320
Alphabeta Shade Round Medium	Black Green	20371
Alphabeta Shade Round Medium	Silk Grey	20372
Alphabeta Shade Round Small	Jet Black	13303
Alphabeta Shade Round Small	Signal White	13304
Alphabeta Shade Round Small	Sulfur Yellow	20373
Alphabeta Shade Round Small	Soft Blue	20374
Alphabeta Shade Round Tall	Jet Black	13316
Alphabeta Shade Round Tall	Light Pink	13315
Alphabeta Shade Round Tall	Signal White	13317
Alphabeta Shade Round Tall	Black Green	20375

Always in stock
We keep all our products in stock and ready to ship from our warehouses in the US and EU

Jet Black (RAL 9005)
Powder Coated Steel

Signal White (RAL 9003)
Powder Coated Steel

Luminous Green (RAL 6038)
Powder Coated Steel

Silk Grey (RAL 7044)
Powder Coated Steell

Beige (RAL 1001)
Powder Coated Steel

Light Pink (RAL 3015)
Powder Coated Steel

Ultramarine Blue (RAL 5002)
Powder Coated Steel

Soft Blue (RAL 230 85 20)
Powder Coated Steel

Black Green (RAL 6012)
Powder Coated Steel

Sulfur Yellow (RAL 1016)
Powder Coated Steel

MTO
Please refer to the price list or reach out to your local representative for our made-to-order options

Shade material
Steel
Powder Coated
Lacquered

Base material
Steel / Aluminum
Powder Coated / Anodized

Bulb specifications
Recommended for US:
2 × G9 LED, max. 5W/120V

Recommended for EU/UK:
2 × G9 LED, max. 5W/230V
or 2 × G9 Halogen, max. 48W/230V

Please note that the Alphabeta lamps ship without bulbs

Controls
On/off floor switch on cord

Country of origin
Italy and China

Tests & certifications
CE Approved
UL Listed

3D model
3D files of all products are available on the product pages on hem.com

Modularity
This is a modular product that can be configured freely to fit your needs. Reach out to info@hem.com for assistance

Alphabeta Shades Overview

Cone Small
H: 9 cm / 3.5 in
D: 14 cm / 5.5 in

Cone Tall
H: 17 cm / 6.6 in
D: 14 cm / 5.5 in

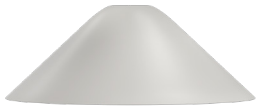

Cone Large
H: 12 cm / 4.7 in
D: 34 cm / 13.3 in

Round Small
H: 8 cm / 3.1 in
D: 9 cm / 3.5 in

Round Medium
H: 8 cm / 3.1 in
D: 14 cm / 5.5 in

Round Large
H: 11 cm / 4.3 in
D: 19 cm / 7.4 in

Round Tall
H: 15 cm / 5.9 in
D: 16 cm / 6.2 in

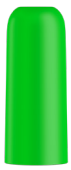

Round Cylinder
H: 21 cm / 8.3 in
D: 8 cm / 3.1 in

Floor Lamp Base
H (adjustable):
150-170 cm / 59-67 in

Alphabeta Floorlamp

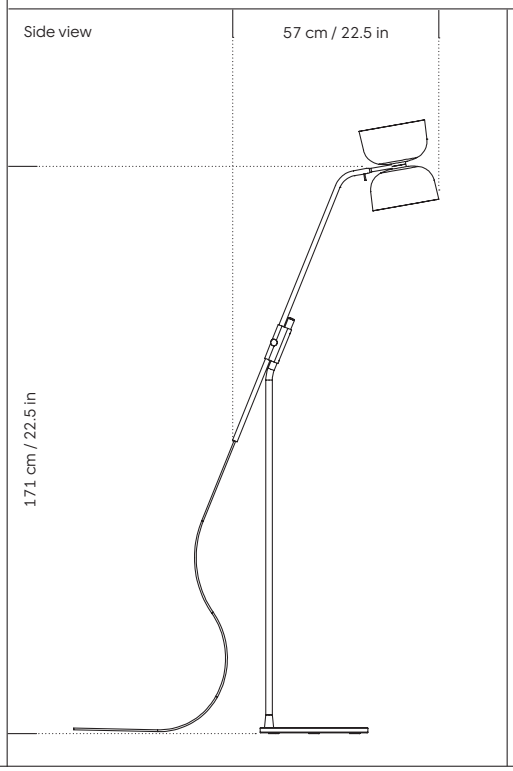

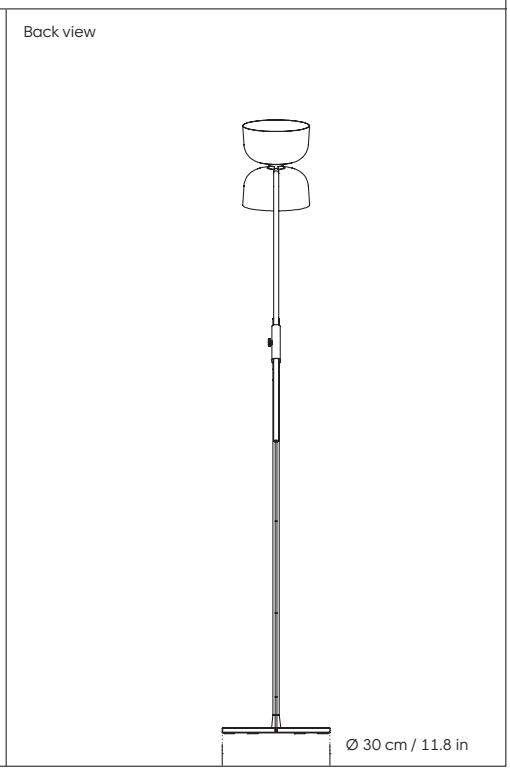

Alphabeta Pendant Light

Design by Luca Nichetto

Variety and flexibility are at the heart of the modular Alphabeta lighting system by Luca Nichetto. Eight different shade shapes in a wide range of powder-coated colors equate to a plethora of possibilities—1024 to be exact. Whatever your aesthetic, from strict and somber all-black to playful and flamboyant color combinations, sharp lines or voluptuous forms, Alphabeta can accommodate them all. Alphabeta are bidirectional—meaning they emit light from both the top and the bottom of the shade—so that you need not choose between spotlight and ambient light but can enjoy both. The Alphabeta Pendant Lights hang on a metal wire, with a sinuous cable adding a curvaceous detail. Pendants can be used singularly or in groups for an impactful installation. Every turned-steel shade and milled part is made in Italy.

Product name	Finish	SKU
Alphabeta Pendant Light Standard Cable (EU/UK)	Black	13336
Alphabeta Pendant Light Standard Cable (US)	Black	13337
Alphabeta Pendant Light Extended Cable (EU/UK)	Black	40086
Alphabeta Pendant Light Extended Cable (US)	Black	40361
Alphabeta Shade Cone Large	Jet Black	13313
Alphabeta Shade Cone Large	Signal White	13314
Alphabeta Shade Cone Large	Luminous Green	20253
Alphabeta Shade Cone Large	Silk Grey	20252
Alphabeta Shade Cone Small	Jet Black	13309
Alphabeta Shade Cone Small	Signal White	13310
Alphabeta Shade Cone Small	Soft Blue	20368
Alphabeta Shade Cone Small	Sulfur Yellow	20369
Alphabeta Shade Cone Tall	Jet Black	13306
Alphabeta Shade Cone Tall	Signal White	13307
Alphabeta Shade Cone Tall	Beige	20254
Alphabeta Shade Cone Tall	Ultramarine Blue	20255
Alphabeta Shade Round Cylinder	Jet Black	13322
Alphabeta Shade Round Cylinder	Light Pink	20008
Alphabeta Shade Round Cylinder	Signal White	13323
Alphabeta Shade Round Cylinder	Luminous Green	20370
Alphabeta Shade Round Large	Jet Black	13300
Alphabeta Shade Round Large	Signal White	13301
Alphabeta Shade Round Large	Ultramarine Blue	20256
Alphabeta Shade Round Large	Beige	20257
Alphabeta Shade Round Medium	Jet Black	13319
Alphabeta Shade Round Medium	Signal White	13320
Alphabeta Shade Round Medium	Black Green	20371
Alphabeta Shade Round Medium	Silk Grey	20372
Alphabeta Shade Round Small	Jet Black	13303
Alphabeta Shade Round Small	Signal White	13304
Alphabeta Shade Round Small	Sulfur Yellow	20373
Alphabeta Shade Round Small	Soft Blue	20374
Alphabeta Shade Round Tall	Jet Black	13316
Alphabeta Shade Round Tall	Light Pink	13315
Alphabeta Shade Round Tall	Signal White	13317
Alphabeta Shade Round Tall	Black Green	20375

Always in stock
We keep all our products in stock and ready to ship from our warehouses in the US and EU

Jet Black (RAL 9005) *Powder Coated Steel*

Signal White (RAL 9003) *Powder Coated Steel*

Luminous Green (RAL 6038) *Powder Coated Steel*

Silk Grey (RAL 7044) *Powder Coated Steel*

Beige (RAL 1001) *Powder Coated Steel*

Light Pink (RAL 3015) *Powder Coated Steel*

Ultramarine Blue (RAL 5002) *Powder Coated Steel*

Soft Blue (RAL 230 85 20) *Powder Coated Steel*

Black Green (RAL 6012) *Powder Coated Steel*

Sulfur Yellow (RAL 1016) *Powder Coated Steel*

MTO
Please refer to the price list or reach out to your local representative for our made-to-order options

Shade material
Steel
Powder Coated
Lacquered

Base material
Steel / Aluminum
Powder Coated Black

Canopy material
Steel / Aluminum
Powder Coated Black

Bulb specifications
Recommended for US:
2 × G9 LED, max. 5W/120V
or 2 × G9 Halogen, max. 48W/120V

Recommended for EU/UK:
2 × G9 LED, max. 5W/230V
or 2 × G9 Halogen, max. 48W/230V

Bulb height maximum: 5.9 cm / 2.3 in
Bulb diameter maximum: 2.2 cm / 0.9 in

Please note that the Alphabeta lamps ship without bulbs

Cable Options
Standard Cable
Hanging length: 1.6 m / 5.2 ft
Cable length: 2 m / 6.6 ft

Extended Cable (EU/UK)
Hanging length 5.2 m / 17 ft
Cable length 5.7 m / 18.7 ft

Extended Cable (US)
Hanging length: 6 m / 19.7 ft
Cable length: 6.5 m / 21.3 ft

All cables are site-adjustable.

Country of origin
Italy and China

Tests & certifications
CE Approved
UL Listed

3D model
3D files of all products are available on the product pages on hem.com

Modularity
This is a modular product that can be configured freely to fit your needs. Reach out to info@hem.com for assistance

Alphabeta Shades Overview

Cone Small
H: 9 cm / 3.5 in
D: 14 cm / 5.5 in

Cone Tall
H: 17 cm / 6.6 in
D: 14 cm / 5.5 in

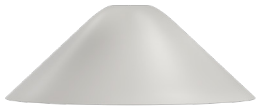

Cone Large
H: 12 cm / 4.7 in
D: 34 cm / 13.3 in

Round Small
H: 8 cm / 3.1 in
D: 9 cm / 3.5 in

Round Medium
H: 8 cm / 3.1 in
D: 14 cm / 5.5 in

Round Large
H: 11 cm / 4.3 in
D: 19 cm / 7.4 in

Round Tall
H: 15 cm / 5.9 in
D: 16 cm / 6.2 in

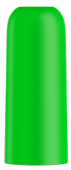

Round Cylinder
H: 21 cm / 8.3 in
D: 8 cm / 3.1 in

Cable
Find available cable options in the column on the left

Alphabeta Pendant Light

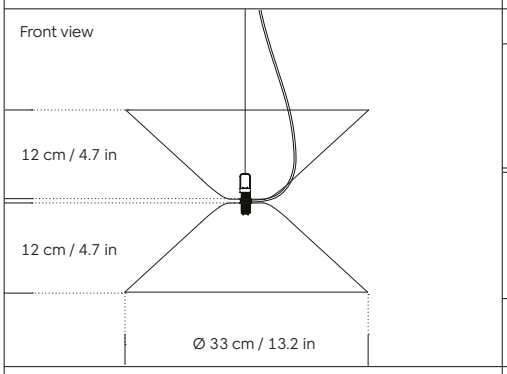

Alphabeta Pendant Light

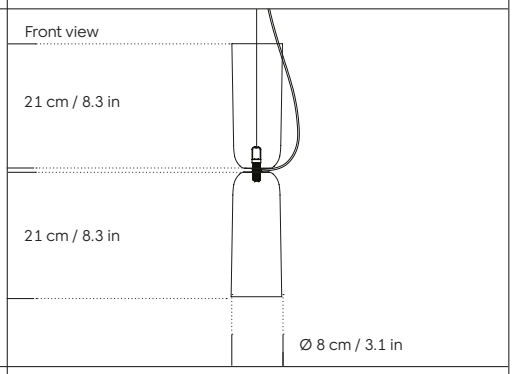

Cable (canopy)

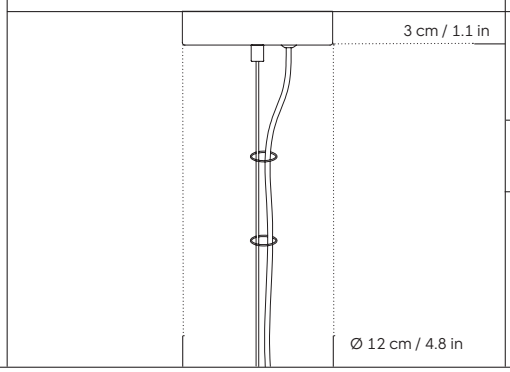

Cable (lampholder)

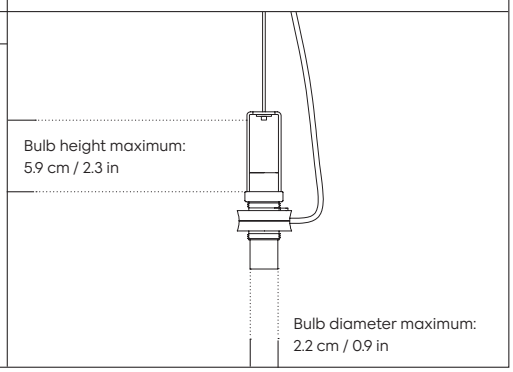

Alphabeta Wall Light

Design by Luca Nichetto

Variety and flexibility are at the heart of the modular Alphabeta lighting system by Luca Nichetto. Eight different shade shapes in a wide range of powder-coated colors equate to a plethora of possibilities—1024 to be exact. Whatever your aesthetic, from strict and somber all-black to playful and flamboyant color combinations, sharp lines or voluptuous forms, Alphabeta can accommodate them all. Alphabeta are bidirectional—meaning they emit light from both the top and the bottom of the shade—so that you need not choose between spotlight and ambient light but can enjoy both. The Alphabeta Wall Light comes either with a cable and dimmer, or without cable for direct installation.

Product name	Finish	SKU
Alphabeta Wall Light Base with Cable (EU) Black	Black	30581
Alphabeta Wall Light Base with Cable (US) Black	Black	30582
Alphabeta Wall Light Base with Cable (UK) Black	Black	30583
Alphabeta Wall Light Base (EU) Black	Black	30584
Alphabeta Wall Light Base (US) Black	Black	30585
Alphabeta Shade Cone Large	Jet Black	13313
Alphabeta Shade Cone Large	Signal White	13314
Alphabeta Shade Cone Large	Luminous Green	20253
Alphabeta Shade Cone Large	Silk Grey	20252
Alphabeta Shade Cone Small	Jet Black	13309
Alphabeta Shade Cone Small	Signal White	13310
Alphabeta Shade Cone Small	Soft Blue	20368
Alphabeta Shade Cone Small	Sulfur Yellow	20369
Alphabeta Shade Cone Tall	Jet Black	13306
Alphabeta Shade Cone Tall	Signal White	13307
Alphabeta Shade Cone Tall	Beige	20254
Alphabeta Shade Cone Tall	Ultramarine Blue	20255
Alphabeta Shade Round Cylinder	Jet Black	13322
Alphabeta Shade Round Cylinder	Light Pink	20008
Alphabeta Shade Round Cylinder	Signal White	13323
Alphabeta Shade Round Cylinder	Luminous Green	20370
Alphabeta Shade Round Large	Jet Black	13300
Alphabeta Shade Round Large	Signal White	13301
Alphabeta Shade Round Large	Ultramarine Blue	20256
Alphabeta Shade Round Large	Beige	20257
Alphabeta Shade Round Medium	Jet Black	13319
Alphabeta Shade Round Medium	Signal White	13320
Alphabeta Shade Round Medium	Black Green	20371
Alphabeta Shade Round Medium	Silk Grey	20372
Alphabeta Shade Round Small	Jet Black	13303
Alphabeta Shade Round Small	Signal White	13304
Alphabeta Shade Round Small	Sulfur Yellow	20373
Alphabeta Shade Round Small	Soft Blue	20374
Alphabeta Shade Round Tall	Jet Black	13316
Alphabeta Shade Round Tall	Light Pink	13315
Alphabeta Shade Round Tall	Signal White	13317
Alphabeta Shade Round Tall	Black Green	20375

Always in stock
We keep all our products in stock and ready to ship from our warehouses in the US and EU

Jet Black (RAL 9005) *Powder Coated Steel*

Signal White (RAL 9003) *Powder Coated Steel*

Luminous Green (RAL 6038) *Powder Coated Steel*

Silk Grey (RAL 7044) *Powder Coated Steel*

Beige (RAL 1001) *Powder Coated Steel*

Light Pink (RAL 3015) *Powder Coated Steel*

Ultramarine Blue (RAL 5002) *Powder Coated Steel*

Soft Blue (RAL 230 85 20) *Powder Coated Steel*

Black Green (RAL 6012) *Powder Coated Steel*

Sulfur Yellow (RAL 1016) *Powder Coated Steel*

MTO
Please refer to the price list or reach out to your local representative for our made-to-order options

Shade material
Steel
Powder Coated
Lacquered

Base material
Steel / Aluminum
Powder Coated Black

Bulb specifications
Recommended for US:
2 × G9 LED, max. 5W/120V

Recommended for EU/UK:
2 × G9 LED, max. 5W/230V
or 2 × G9 Halogen, max. 48W/230V

Please note that the Alphabeta lamps ship without bulbs

Cable
Length:
2 m / 78.7 in

Distance to dimmer from light:
90 cm / 35.4 in

Country of origin
Italy and China

Tests & certifications
CE Approved
UL Listed

3D model
3D files of all products are available on the product pages on hem.com

Modularity
This is a modular product that can be configured freely to fit your needs. Reach out to info@hem.com for assistance

Alphabeta Shades Overview

Cone Small
H: 9 cm / 3.5 in
D: 14 cm / 5.5 in

Cone Tall
H: 17 cm / 6.6 in
D: 14 cm / 5.5 in

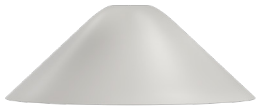

Cone Large
H: 12 cm / 4.7 in
D: 34 cm / 13.3 in

Round Small
H: 8 cm / 3.1 in
D: 9 cm / 3.5 in

Round Medium
H: 8 cm / 3.1 in
D: 14 cm / 5.5 in

Round Large
H: 11 cm / 4.3 in
D: 19 cm / 7.4 in

Round Tall
H: 15 cm / 5.9 in
D: 16 cm / 6.2 in

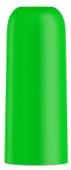

Round Cylinder
H: 21 cm / 8.3 in
D: 8 cm / 3.1 in

Base
The Base is also available with cable.

Alphabeta Wall Light

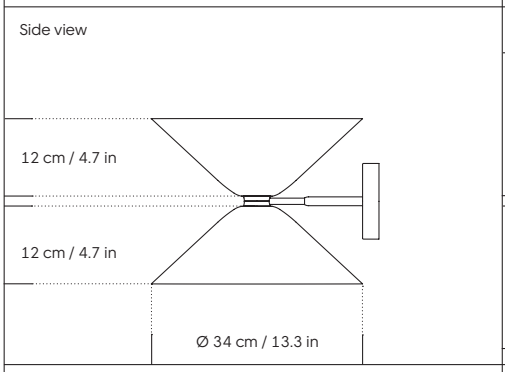

Alphabeta Wall Light

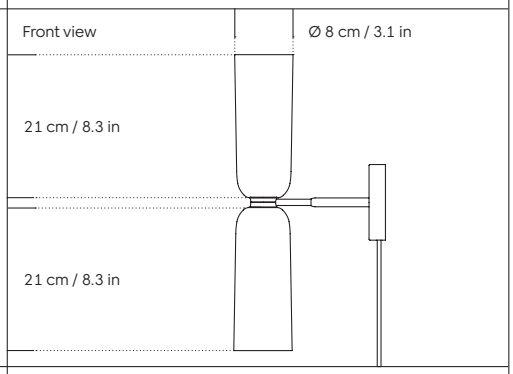

Base

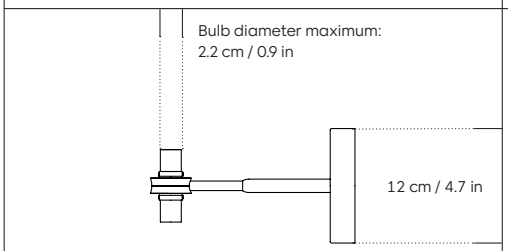

Base with Cable

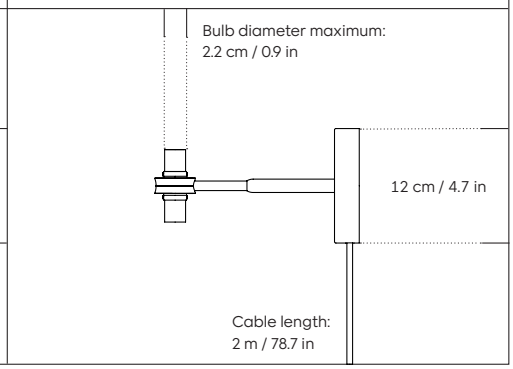

Knuckle Table Lamp

Design by David Taylor

The Knuckle Lights by David Taylor are an exercise in visual balance, a kind of joyful play between the organic and the geometric. Knuckle is inspired by Taylor's signature bent extruded aluminum art pieces, which are created by forcing this most stringent of materials into new shapes and forms. This method of working, translated into Knuckle, creates a sense of softness and fluidity uncommon in an industrial product. Knuckle comes in the form of a modest table light with one bulb, and as a chandelier version, resplendent with eight bulbs.

Product name	Finish	SKU
Knuckle Table Lamp (EU)	Brushed Aluminum	20465
Knuckle Table Lamp (UK)	Brushed Aluminum	30656
Knuckle Table Lamp (US)	Brushed Aluminum	20466

Base material
Aluminum
Brushed Aluminum

Bulb specifications
Recommended for US:
1 × Tala Sphere III E26, max. 8W/120V

Recommended for EU/UK:
1 × Tala Sphere III E27, max. 8W/240V

Bulbs are included.

Cable
Cable length: 185 cm / 72.8 in

Country of origin
China

Tests & certifications
EU / UK certifications
EN 60598-2-4:2018, EN IEC 60598-1:2021, EN IEC 60598-1:2021, EN 61547:2009, EN 61000-3-3:2013+A2:2021, EN IEC 61000-3-2:2019+A1:2021, RoHS directive 2011/65/EU

US certifications
UL153 , CSA C22 No.250.4

4002604

3D model
3D files of all products are available on the product pages on hem.com

Always in stock
We keep all our products in stock and ready to ship from our warehouses in the US and EU

Natural Silver
Brushed Aluminum

Knuckle Table Lamp

Side view

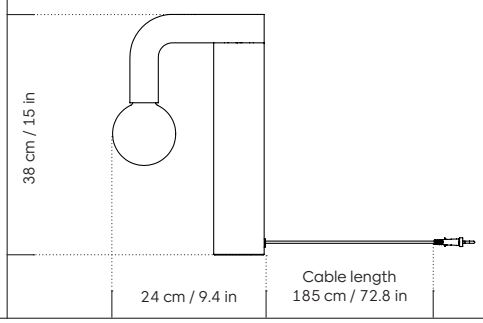

Front view

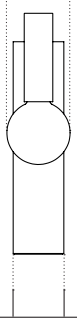

Toto Table Lamp

Design by Fabien Cappello

Toto is an irrepressible burst of color and light. Its silhouette is that of an archetypal lamp, all-angled shade and a chunky base. But that is where the familiarity ends. Toto is entirely covered from textile as a playful extension of the classic lampshade itself. Material uniformity, coupled with vivid color and graphic pattern, lends the lamp a cartoonish presence. So does exaggerated scale; the Toto Large lamp is blown up, jumbo, never-to-be-ignored, visually giant yet physically light, while Toto Small's tidy and diminutive size is more than a bit charming. With Toto, Fabien Cappello has designed a joyful, covetable depiction of a lamp. Customers can choose their own combination for shade and base in both Toto Large and Medium variants. Toto Small is available in block colors only.

Product name	Finish	SKU (US)	SKU (EU)	SKU (UK)
Toto Table Lamp Small	Magenta	31246	31207	31257
	Pine	31247	31208	31258
	Wax Yellow	31248	31209	31259
	Beige	31245	31206	31256
Toto Table Lamp Medium	Wax Yellow / Wax Yellow	31244	31205	31281
	Beige / Wax Yellow	31232	31193	31269
	Pine / Wax Yellow	31240	31201	31277
	Magenta / Wax Yellow	31236	31197	31273
	Wax Yellow / Magenta	31242	31203	31279
	Beige / Magenta	31230	31191	31267
	Pine / Magenta	31238	31199	31275
	Magenta / Magenta	31234	31195	31271
	Wax Yellow / Beige	31241	31202	31278
	Beige / Beige	31229	31190	31266
	Pine / Beige	31237	31198	31274
	Magenta / Beige	31233	31194	31270
	Wax Yellow / Pine	31243	31204	31280
	Beige / Pine	31231	31192	31268
	Pine / Pine	31239	31200	31276
	Magenta / Pine	31235	31196	31272
Toto Table Lamp Large	Wax Yellow / Black & White H Stripe	31226	31187	31263
	Pine / Black & White H Stripe	31223	31184	31260
	Pine / Wax Yellow	31225	31186	31262
	Wax Yellow / Wax Yellow	31228	31189	31265
	Wax Yellow / Pine	31227	31188	31264
	Pine / Pine	31224	31185	31261

Material
Polyester Blend Textile
92.7% polyester, 7.3% cotton

Inside Material
Painted Steel Structure, PMMA Diffuser, PVC Shade Backing

Bulb specifications
Recommended for US:
Toto Large
1 × E26 dimmable LED, max. 8W/120V 60Hz

Toto Medium
1 × E26 dimmable LED, max. 8W/120V 60Hz

Toto Small
1 × E12 dimmable LED, max. 5W/120V 50Hz

Recommended for EU/UK:
Toto Large
1 × E27 dimmable LED, max. 8W/240V 60Hz

Toto Medium
1 × E27 dimmable LED, max. 8W/240V 60Hz

Toto Small
1 × E14 dimmable LED, max. 5W/240V 50Hz

Toto Lights are fitted with an In-line radial dimmer switch on the cords. Please note that Toto Lights ships without bulbs.

Cable Length
180 cm / 70.9 in

Always in stock
We keep all our products in stock and ready to ship from our warehouses in the US and EU

Magenta
Polyester Blend Textile

Pine
Polyester Blend Textile

Wax Yellow
Polyester Blend Textile

Beige
Polyester Blend Textile

Black & White H Stripe
Polyester Blend Textile

3D model
3D files of all products are available on the product pages on hem.com

Tests & certifications

EU / UK certifications

EN 60598-2-4:2018, EN IEC 60598-1:2021, EN IEC 55015:2019+A11:2020, EN 61547:2009, EN IEC 61000-3-2:2019+A1:2021, EN 61000-3-3:2013+A2:2021, RoHS directive 2011/65/EU

US certifications

UL 153, CSA C22.2 No.250.4

4002604

Toto Table Lamp Large

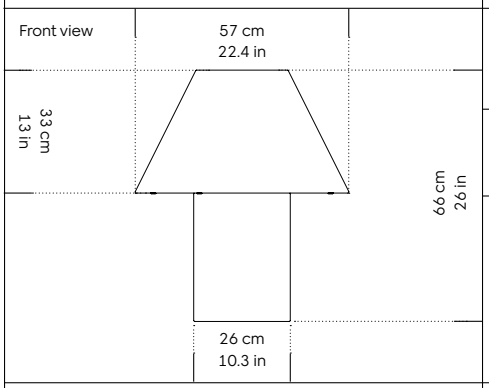

Toto Table Lamp Medium

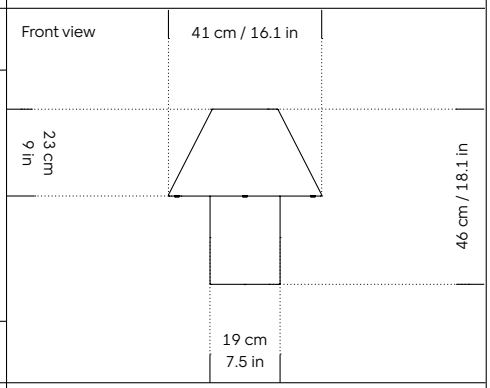

Toto Table Lamp Small

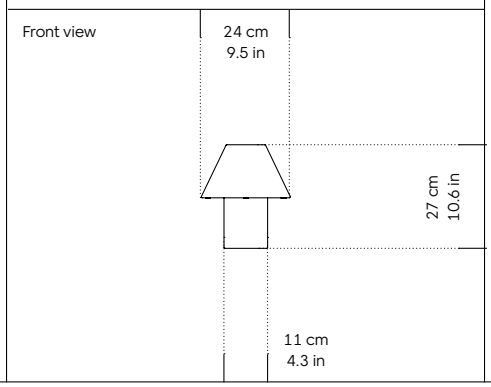

Shelving

Storage

Where would we be without some order in our lives? Our elegant and considered storage systems are designed to work with your belongings, whether it is display or concealment you are looking for.

Hide Pedestal

Design by Karoline Fesser

The Hide Table by Karoline Fesser is a Hem hero product. Why? Because this modest piece of furniture is far more necessary and boundless than it might at first seem. The Hide Table can be discreet: tucked under a larger desk or table for additional storage, or sitting quietly in the corner of a room, its back turned to conceal its contents. Or it can be bold: a pedestal and side table for your favorite objects, a punctuation of brilliant color, or an open display for all manner of paraphernalia. The Hide Table is beautifully finished in powder-coated steel and has wheels for easy maneuverability. We have yet to hear from a regretful owner.

Product name	Finish	SKU	Finish	SKU
Hide Pedestal	Signal Black	30031	Jet Black Textured	30745
	Light Ivory	30032	Light Ivory Textured	30746
	Light Pink	30325	Light Pink Textured	30752
	Pure Green	30554	Pure Green Textured	30754
	Red Brown	30034	Red Brown Textured	30748
	Ultramarine	30326	Ultramarine Textured	30753

Material
Steel
Powder Coated

Finish
No Texture / Fine Texture

Country of origin
No Texture: Poland
Fine Texture: Lithuania

3D model
3D files of all products are available on the product pages on hem.com

Finishes

Signal Black (RAL 9004)
Powder Coated Steel

Light Ivory (RAL 1015)
Powder Coated Steel

Red Brown (RAL 8012)
Powder Coated Steel

Light Pink (RAL 3015)
Powder Coated Steel

Ultramarine Blue (RAL 5002)
Powder Coated Steel

Pure Green (RAL 6037)
Powder Coated Steel

Samples
We supply samples of our material finishes. You can order them directly from hem.com/samples

Textures

None

Fine

MTO
Please refer to the price list or reach out to your local representative for our made-to-order options

Hide Pedestal

Top view

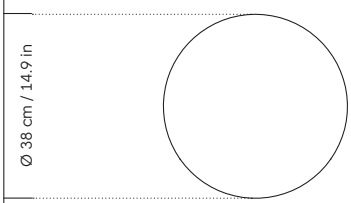

Side view

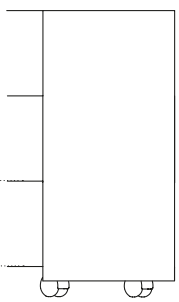

Back view

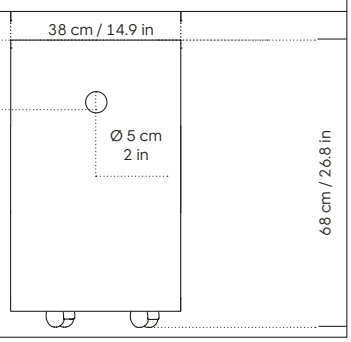

Hide Side Table

Design by Karoline Fesser

The Hide Table by Karoline Fesser is a Hem hero product. Why? Because this modest piece of furniture is far more necessary and boundless than it might at first seem. The Hide Table can be discreet: tucked under a larger desk or table for additional storage, or sitting quietly in the corner of a room, its back turned to conceal its contents. Or it can be bold: a pedestal and side table for your favorite objects, a punctuation of brilliant color, or an open display for all manner of paraphernalia. The Hide Table is beautifully finished in powder-coated steel and has wheels for easy maneuverability. We have yet to hear from a regretful owner.

Product name	Finish	SKU	Finish	SKU
Hide Side Table	Signal Black	14153	Jet Black Textured	30742
	Light Ivory	14152	Light Ivory Textured	30741
	Light Pink	30148	Light Pink Textured	30750
	Pure Green	30556	Pure Green Textured	30756
	Red Brown	14155	Red Brown Textured	30744
	Ultramarine Blue	30149	Ultramarine Blue Textured	30751

Material
Steel
Powder Coated

Finish
No Texture / Fine Texture

Country of origin
No Texture: Poland
Fine Texture: Lithuania

3D model
3D files of all products are available on the product pages on hem.com

Finishes

Signal Black (RAL 9004)
Powder Coated Steel

Light Ivory (RAL 1015)
Powder Coated Steel

Red Brown (RAL 8012)
Powder Coated Steel

Light Pink (RAL 3015)
Powder Coated Steel

Ultramarine Blue (RAL 5002)
Powder Coated Steel

Pure Green (RAL 6037)
Powder Coated Steel

Textures

None

Fine

Samples
We supply samples of our material finishes. You can order them directly from hem.com/samples

MTO
Please refer to the price list or reach out to your local representative for our made-to-order options

Hide Side Table

Top view

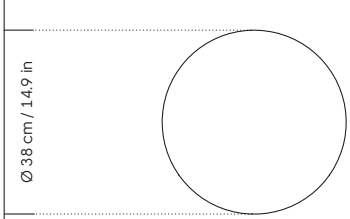

Side view

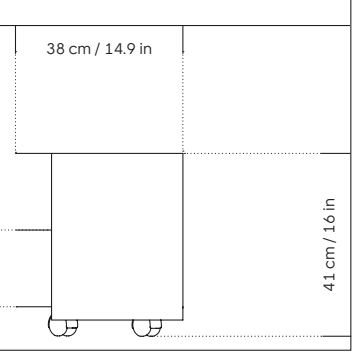

Zig Zag Shelf

Design by Studio deFORM

There is a pleasing visual rhythm to the Zig Zag Shelf: its grid-like frame effortlessly creates an elegant semblance of order, making whatever you choose to place on it feel instantly arranged and considered. Designers Studio deForm invented a system of construction that enables you, the end user, to assemble the Zig Zag Shelf without tools. An innovative hidden folding hinge allows the flat-packed shelves to simply stretch into shape like an accordion—ready for use in record time.

Product name	Finish	SKU
Zig Zag Shelf High	Oak	14143
	Walnut	20088
	Black	30983
Zig Zag Shelf Low	Oak	14142
	Walnut	20087
	Black	30984

Shelf material
Oak Veneer
Quercus Robur
Clear Lacquered

Walnut Veneer
Juglans Nigra
Clear Lacquered

Ash Veneer
Fraxinus Excelsior
Black Lacquered

Base material
Solid Oak
Quercus Robur
Clear Lacquered

Solid Walnut
Juglans Nigra
Clear Lacquered

Solid Ash
Fraxinus Excelsior
Black Lacquered

Wood is a natural material. The color might vary from piece to piece

Country of origin
Poland

Tests & certifications
EN 16121:2013 – Test severity 2. Non-domestic storage furniture – Requirements for safety, strength, durability and stability, FSC Mix

3D model
3D files of all products are available on the product pages on hem.com

Always in stock
We keep all our products in stock and ready to ship from our warehouses in the US and EU

Oak

Walnut

Samples
We supply samples of our material finishes. You can order them directly from hem.com/samples

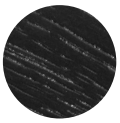

Black

Zig Zag Shelf High

Front view

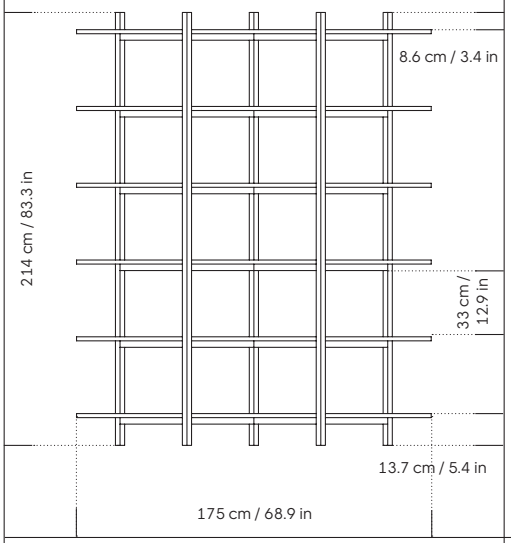

MTO
Please refer to the price list or reach out to your local representative for our made-to-order options

Zig Zag Shelf Low

Front view

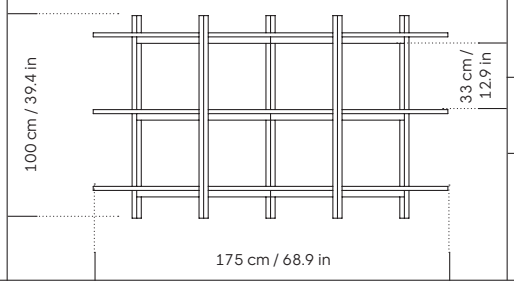

Zig Zag Shelf High & Zig Zag Shelf Low

Top view

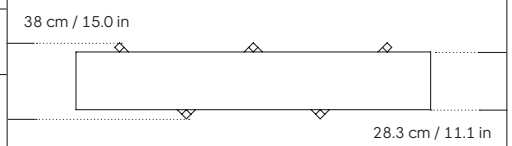

Zig Zag Shelf Media

Design by Studio deFORM

There is a pleasing visual rhythm to the Zig Zag Shelf: its grid-like frame effortlessly creates an elegant semblance of order, making whatever you choose to place on it feel instantly arranged and considered. Designers Studio deForm invented a system of construction that enables you, the end user, to assemble the Zig Zag Shelf without tools. An innovative hidden folding hinge allows the flat-packed shelves to simply stretch into shape like an accordion—ready for use in record time.

Product name	Finish	SKU
Zig Zag Shelf Media	Oak Walnut Black	20090 20089 30985

Shelf material
Oak Veneer
Quercus Robur
Clear Lacquered

Walnut Veneer
Juglans Nigra
Clear Lacquered

Ash Veneer
Fraxinus Excelsior
Black Lacquered

Base material
Solid Oak
Quercus Robur
Clear Lacquered

Solid Walnut
Juglans Nigra
Clear Lacquered

Solid Ash
Fraxinus Excelsior
Black Lacquered

Wood is a natural material. The color might vary from piece to piece

Country of origin
Poland

Tests & certifications
EN 16121:2013 – Test severity 2. Non-domestic storage furniture – Requirements for safety, strength, durability and stability, FSC Mix

3D model
3D files of all products are available on the product pages on hem.com

Always in stock
We keep all our products in stock and ready to ship from our warehouses in the US and EU

Oak

Walnut

Samples
We supply samples of our material finishes. You can order them directly from hem.com/samples

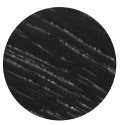

Black

MTO
Please refer to the price list or reach out to your local representative for our made-to-order options

Zig Zag Shelf Media

Front view

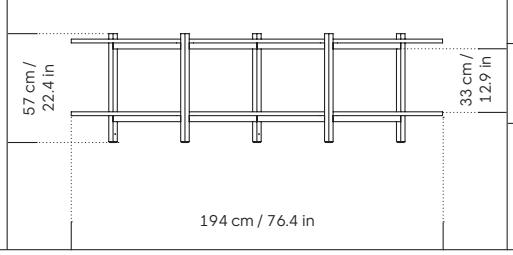

Top view

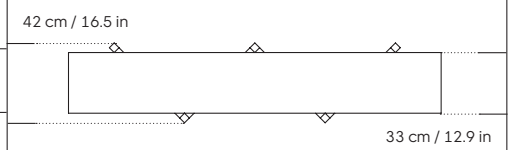

Rugs

What goes underfoot should be of the very best quality. All our rugs are handmade and designed for longevity, using highquality natural fibers.

Monster Rug

Design by Siri Carlén

The Monster patterns by artist and illustrator Siri Carlén are playful exaggerations of markings found in nature. And fittingly, these boldly striped and ringed patterns adorn our largest rugs yet. The Monster collection of floor coverings are made to the highest standards; they are painstakingly hand-knotted by skilled makers in soft new wool, meaning that your Monster will be around to offer deep comfort and vibrant colour for many years to come. Produced in India by a weaving collective to global ethical standards such as GoodWeave, SGS, and Woolmark.

Product name	Finish	SKU
Monster Rug Medium	Beige / Off-white	30804
	Ultramarine Blue / Off-white	30805
Monster Rug Extra Large	Beige / Off-white	30489
	Ultramarine Blue / Off-white	30490
	Turquoise / Peach	30491
	Dark Teal / Off-white	30492

Material
100% New Zealand Wool

Country of origin
India

Size tolerance
All our rugs are hand-crafted and may vary up to +/- 5% along the total length or width

Construction method
Hand knotted

Certifications
Woolmark, Goodweave

Always in stock
We keep all our products in stock and ready to ship from our warehouses in the US and EU

Beige / Off-white

Ultramarine Blue / Off-white

Turquoise / Peach

Dark Teal / Off-white

Monster Rug Medium

Top view

240 cm / 94.5 in

170 cm / 66.9 in

Weight: 24 kg / 52.9 lb

Pile height: 5 cm / 2 in

Monster Rug Extra Large

Top view

350 cm / 137.8 in

250 cm / 98.4 in

Weight: 49 kg / 108 lb

Pile height: 5 cm / 2 in

Rope Rug

Design by Pauline Deltour

Deeply textural, extremely functional, pleasantly tactile—the Rope Rug series is an innovative take on a familiar typology. Designer Pauline Deltour was inspired to reimagine the endlessly practical traditional Japanese tatami mat, but with rope to create a chunkier and more durable textile. Hem first produces meter upon meter of our own colorful cotton rope, which is then skillfully hand-woven into rugs of a variety of colorways and sizes. The rhythmic looping is an alluring texture when viewed from afar and a compelling design detail when experienced up close.

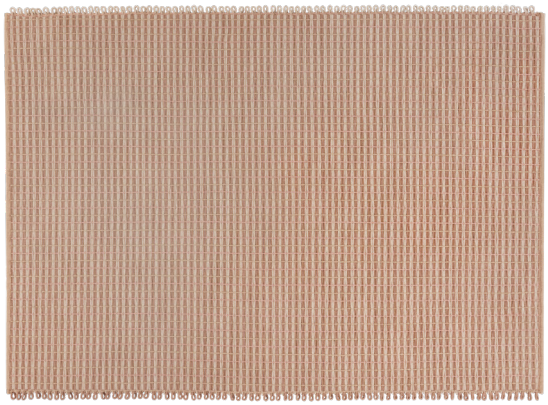

Product name	Finish	SKU
Rope Rug Large	Night Blue	30105
	Pine	30485
	Rose Quartz	30487
	Salt & Pepper	30111
	Seaweed	30102
	Terracotta	30108
Rope Rug Medium	Night Blue	30106
	Pine	30486
	Rose Quartz	30488
	Salt & Pepper	30112
	Seaweed	30103
	Terracotta	30109

Material
95% Cotton, 5% Polyester

Country of origin
India

Size tolerance
All our rugs are hand-crafted and may vary up to +/- 5% along the total length or width

Construction method
Hand Woven

Always in stock
We keep all our products in stock and ready to ship from our warehouses in the US and EU

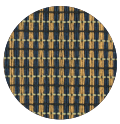

Night Blue

Salt & Pepper

Seaweed

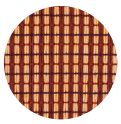

Terracotta

Pine

Rose Quartz

Rope Rug Large

Top view

300 cm / 118.1 in

200 cm / 78.7 in

Weight: 20.1 kg / 44.3 lbs

Total height: 1 cm / 0.39 in

Rope Rug Medium

Top view

240 cm / 94.5 in

170 cm / 66.9 in

Weight: 13.9 kg / 30.6 lbs

Total height: 1 cm / 0.39 in

Solid Rug

Design by Hem

Solid Rug rug isn't just a floor covering; it's a sensory experience, offering plush comfort underfoot. Meticulously crafted, its durability ensures a lasting symbol of refined taste. With a generous pile height and with muted, elegant colors, it seamlessly integrates into any sophisticated interior. Elevate your space with the timeless elegance and versatility of the Solid Rug, where traditional craftsmanship meets contemporary appeal.
Knotted in India from 100% New Zealand Wool, the rug meets global ethical standards such as GoodWeave and Woolmark.

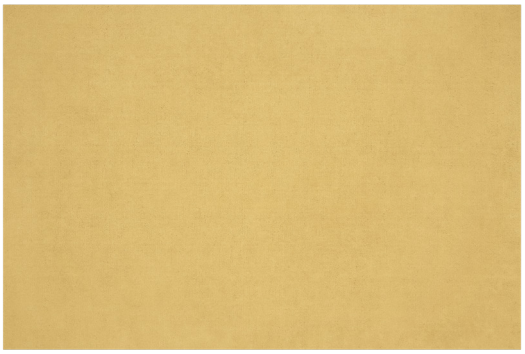

Product name	Finish	SKU
Solid Rug Large	Beige	31367
	Butter	31368
	Rust Red	31369
	Toffee	31370

Material
100% New Zealand Wool

Country of origin
India

Size tolerance
All our rugs are hand-crafted and may vary up to +/- 5% along the total length or width

Certifications
Woolmark, GoodWeave

Always in stock
We keep all our products in stock and ready to ship from our warehouses in the US and EU

Beige

Butter

Rust Red

Toffee

Solid Rug Large

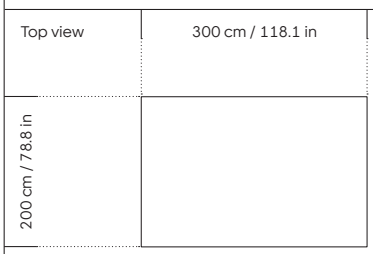

Pile height: 1 cm / 0.4 in

Throws

Cushions

All of our throws and cushions are made from the best quality textiles, whether traditional woven wools or radical 3D-printed fabrics. They soften the edges and bring punctuations of color, pattern, and texture to every interior.

Crepe Cushion

Design by Hem

Our cushion collection is a series of versatile cushions to be used wherever and whenever a little soft support is needed in your home, office, or public space. In high quality textiles like chunky bouclé, luxurious textured wool and sumptuous soft velvet, they come in a large variety of colors and two sizes. Apply them liberally to add colorful punctuation, softness and comfort to any interior.

Product name	Finish	SKU	Product name	Finish	SKU
Crepe Cushion Large	Pine	30767			
	Sand	30769			
	Sunflower	30771			
	Cobalt	30765			
	Pure Green	30928			
	Light Pink	30926			
	Calla	30930			
	Porcelain	30932			
Crepe Cushion Medium	Pine	30775			
	Sand	30777			
	Sunflower	30779			
	Cobalt	30773			
	Pure Green	30929			
	Light Pink	30927			
	Calla	30931			
	Porcelain	30933			

Fabric
Sera
by Rohi (Germany)
97% Pure New Wool, 3% Nylon
122,000 Martindale
Pilling 4-5
Lightfastness 5-8
Flame resistance EN 1021: Part 1 & 2,
US Cal. TB 117-2013

Filling
75% duck feather and 25% down

Country of origin
Poland

Always in stock
We keep all our products in stock and ready to ship from our warehouses in the US and EU

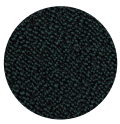

Pine
Sera (Hem exclusive)

Sand
Sera (Hem exclusive)

Sunflower
Sera (Hem exclusive)

Cobalt
Sera (Hem exclusive)

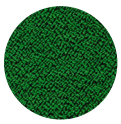

Pure Green
Sera (Hem exclusive)

Light Pink
Sera (Hem exclusive)

Calla
Sera

Porcelain
Sera

Samples
We supply samples of our material finishes. You can order them directly from hem.com/samples

Crepe Cushion Large

Top view

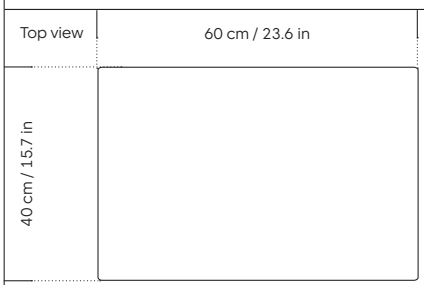

Crepe Cushion Medium

Top view

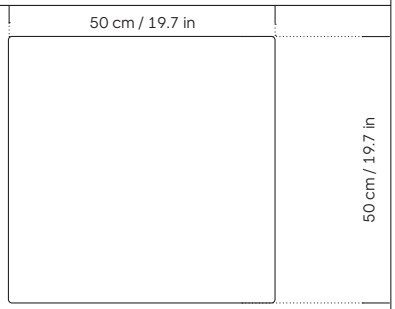

Great Cushion

Design by Philippe Malouin

Fabric
Cifrado
by Kvadrat/Sahco (Denmark)
42% recycled polyester, 27% viscose, 24% recycled cotton, 7% linen
30,000 Martindale
Pilling 5
Lightfastness 5-6
Flame resistance EN 1021: Part 1 & 2, US Cal. TB 117-2013, IMO 2010 FTP Code Part 8

Safire
by Kvadrat/Sahco (Denmark)
43% viscose, 17% polyacrylic, 15% new wool, 9% cotton, 8% polyester, 8% linen
40,000 Martindale
Pilling 3
Lightfastness 5-6
Flame resistance BS 5852: Part 1, EN 1021: Part 1 & 2, US Cal. TB 117-2013, IMO 2010 FTP Code Part 8

Autumn
by Kvadrat (Denmark)
100% Recycled Polyester
50,000 Martindale
Pilling 4-5
Lightfastness 6-7
Flame resistance ASTM E 84 Adhered, ASTM E84 Class A Unadhered, EN 1021: Part 1 & 2, IMO 2010 FTP Code Part 8, US Cal. TB 117-2013

Filling
75% Duck and Goose Feathers, 25% Down

Country of origin
Lithuania

Cifrado
0381

Cifrado
*0111**

Cifrado
*0901**

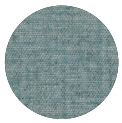

Cifrado
*0741**

Safire
*0003**

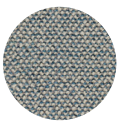

Safire
*0012**

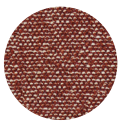

Safire
*0013**

Safire
*0014**

Safire
0007

Autumn
*0131**

Autumn
*0221**

Autumn
*0331**

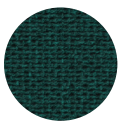

Autumn
*0971**

Autumn
0361

Samples
We supply samples of our material finishes. You can order them directly from hem.com/samples

***MTO**
Reach out to your local representative for the full selection of made-to-order options.

Malange Cushion Large

Top view

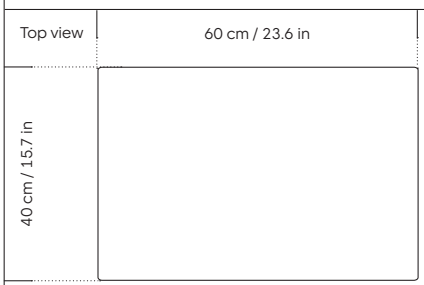

Malange Cushion Medium

Top view

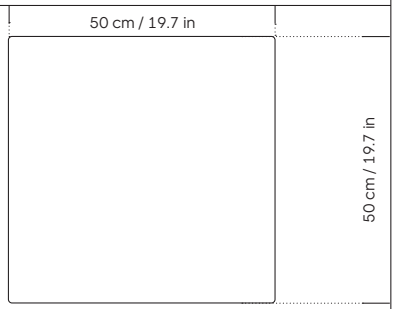

Monster Cushion

Design by Siri Carlén

The Monster patterns by artist and illustrator Siri Carlén are playful exaggerations of markings found in nature. And fittingly, these boldly striped and ringed patterns adorn our most luxurious cushions yet. The Monster Cushions are made to the highest standards; the front is painstakingly hand-knotted by skilled makers in soft new wool and hand-stitched to a durable canvas backing, meaning that your Monster will be around to offer deep comfort and vibrant color for many years to come.

Product name	Finish	SKU
Monster Cushion Medium	Beige / Off-white	30797
	Dark Teal / Off-white	30799
	Turquoise / Peach	30801
	Ultramarine Blue / Off-white	30803
Monster Cushion Large	Beige / Off-white	30789
	Dark Teal / Off-white	30791
	Turquoise / Peach	30793
	Ultramarine Blue / Off-white	30795

Front fabric:
100% New Zealand Wool, hand knotted

Back fabric:
100% Cotton

Filling
75% Duck and Goose feathers, 25% Down

Country of origin
India

Certifications
Woolmark, Goodweave

Always in stock
We keep all our products in stock and ready to ship from our warehouses in the US and EU

Beige / Off-white

Dark Teal / Off-white

Turquoise / Peach

Ultramarine Blue / Off-white

Monster Cushion Medium

Top view

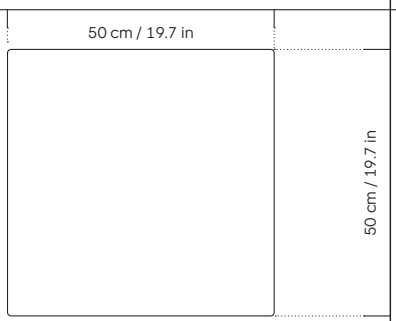

Pile height: 5 cm / 2 in

Monster Cushion Large

Top view

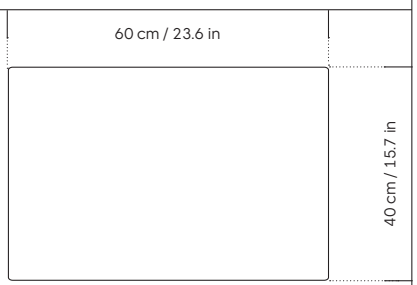

Pile height: 5 cm / 2 in

Neo Cushion

Design by Hem

The Neo Cushion collection is a series of versatile cushions to be used wherever and whenever a little soft support is needed in your home, office, or public space. This textile, called Uniform Melange, has an impossibly smooth appearance and thick, cushiony texture. The Neo Cushion is named after neoprene, a familiar and functional textile with which it shares some similarities, namely a softness to touch and durability. Two tones of thread are used in the 3D knitting, creating an unusual effect that is especially pleasing up close. The Neo Cushions are available in three different colorways and two sizes. Apply them liberally for maximum impact and extreme comfort.

Product name	Finish	SKU
Neo Cushion Large	Ink	30028
	Peacock	30026
	Shell	30030
	Autumn	30395
	Liquorice	30384
	Pink	30385
Neo Cushion Medium	Ink	30027
	Peacock	30025
	Shell	30029
	Autumn	30394
	Liquorice	30381
	Pink	30382

Fabric
Uniform Mélange
by Febrik x Kvadrat (Netherlands)
68% Wool, 22% Nylon, 10% Polyester
100,000 Martindale
Pilling 4
Lightfastness 6
Flame resistance EN 1021: Part 1 & 2, BS 5852: Part 1, US Cal. TB 117

Filling
75% Duck and Goose Feathers, 25% Down

Country of origin
Poland

Always in stock
We keep all our products in stock and ready to ship from our warehouses in the US and EU

Ink
Uniform Mélange (0793)

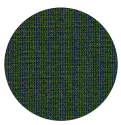

Peacock
Uniform Mélange (0983)

Shell
Uniform Mélange (0103)

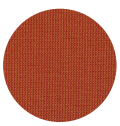

Autumn
Uniform Mélange (0553)

Liquorice
Uniform Mélange (0353)

Pink
Uniform Mélange (0623)

Samples
We supply samples of our material finishes. You can order them directly from hem.com/samples

Neo Cushion Large

Top view

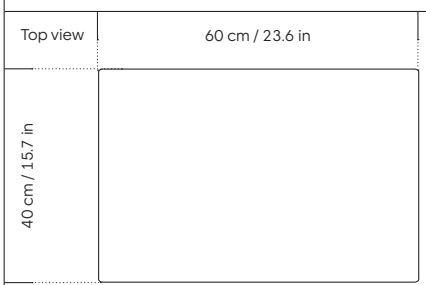

Neo Cushion Medium

Top view

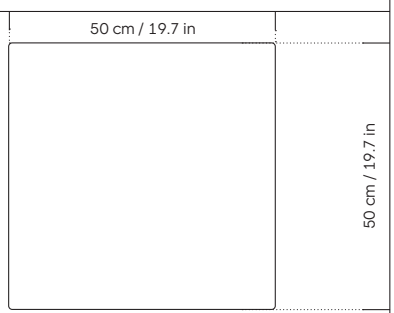

Accessories

Bronto Espresso Cup (Set of 4)

Design by Supergroup

Stocky, bulky and bold, Bronto tableware is a pleasing handful of ceramics. An ample mug and chunky espresso cup are immediately recognizable by their uncommonly fat handles. A side plate and bowl's rounded edges and nonchalant shapes follows suit. Even the smallest of the Bronto family, an eggcup, has serious chunk. As with all Supergroup designs, breezy forms belie technical expertise and, in fact, the exaggerated soft outlines of the Bronto range are a feat of ceramic production. A joyful color palette of high gloss glazes, plus a natural clay option, completes the Supergroup signature. Bronto is intended as your go to set for casual breakfasts, and zippy coffee breaks. 'Small but mighty' might be a fitting description of the Bronto Espresso Cups. These diminutive vessels pack a punch because of their elemental forms and bold color.

Product name	Finish	SKU
Bronto Espresso Cup	Pink	30674
	Orange	30675
	Green	30676
	Yellow	30677
	Sand	30683
	Multi	30678
	Brown	31539

Material
Ceramics
Glazed ceramics

Country of origin
Sri Lanka

Usage
Dishwasher safe
Food safe

Always in stock
We keep all our products in stock and ready to ship from our warehouses in the US and EU

Pink
Glazed ceramics

Orange
Glazed ceramics

Green
Glazed ceramics

Yellow
Glazed ceramics

Sand
Glazed ceramics

Multi
Glazed ceramics

Brown
Glazed ceramics

Bronto Espresso Cup

Top view

Front view

Volume 100 ml

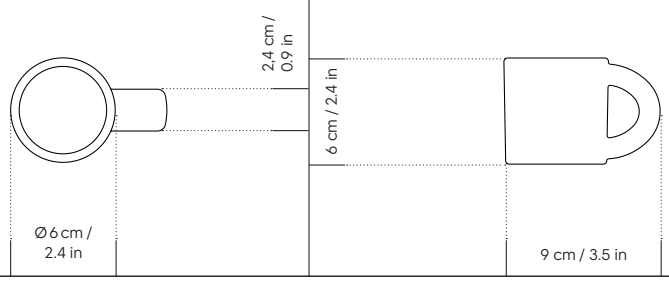

Bronto Mug (Set of 2)

Design by Supergroup

Stocky, bulky and bold, Bronto tableware is a pleasing handful of ceramics. An ample mug and chunky espresso cup are immediately recognizable by their uncommonly fat handles. A side plate and bowl's rounded edges and nonchalant shapes follows suit. Even the smallest of the Bronto family, an eggcup, has serious chunk. As with all Supergroup designs, breezy forms belie technical expertise and, in fact, the exaggerated soft outlines of the Bronto range are a feat of ceramic production. A joyful color palette of high gloss glazes, plus a natural clay option, completes the Supergroup signature. Bronto is intended as your go to set for casual breakfasts, and zippy coffee breaks. The Bronto Mug has a distinctive profile, thanks to its pleasingly fat handle. Bronto Mug's cheery shape disguises a seriously engineered product that pushes the boundaries of industrial ceramic production.

Product name	Finish	SKU
Bronto Mug	Pink	30679
	Orange	30680
	Green	30681
	Yellow	30682
	Sand	30684
	Brown	31538

Material
Ceramics
Glazed ceramics

Country of origin
Sri Lanka

Usage
Dishwasher safe
Food safe

Always in stock
We keep all our products in stock and ready to ship from our warehouses in the US and EU

Pink
Glazed ceramics

Orange
Glazed ceramics

Green
Glazed ceramics

Yellow
Glazed ceramics

Sand
Glazed ceramics

Brown
Glazed ceramics

Bronto Mug

Top view

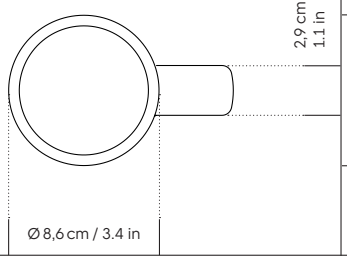

Front view

Volume 300 ml

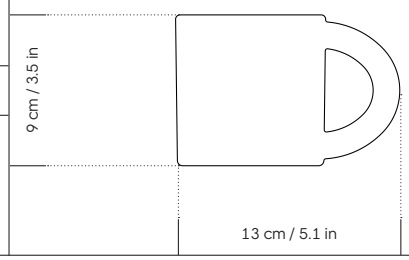

Bronto Plate (Set of 2)

Design by Supergroup

Stocky, bulky and bold, Bronto tableware is a pleasing handful of ceramics. An ample mug and chunky espresso cup are immediately recognizable by their uncommonly fat handles. A side plate and bowl's rounded edges and nonchalant shapes follows suit. Even the smallest of the Bronto family, an eggcup, has serious chunk. As with all Supergroup designs, breezy forms belie technical expertise and, in fact, the exaggerated soft outlines of the Bronto range are a feat of ceramic production. A joyful color palette of high gloss glazes, plus a natural clay option, completes the Supergroup signature. Bronto is intended as your go to set for casual breakfasts, and zippy coffee breaks. The Plate's softly rounded edges give this useful piece of tableware an exaggerated profile that is pure Bronto in its chunky expression.

Product name	Finish	SKU
Bronto Plate	Pink	30670
	Orange	30671
	Green	30672
	Yellow	30673
	Brown	31540

Material
Ceramics
Glazed ceramics

Country of origin
Sri Lanka

Usage
Dishwasher safe
Food safe
Microwave safe

Always in stock
We keep all our products in stock and ready to ship from our warehouses in the US and EU

Pink
Glazed ceramics

Orange
Glazed ceramics

Green
Glazed ceramics

Yellow
Glazed ceramics

Brown
Glazed ceramics

Bronto Plate

Top view

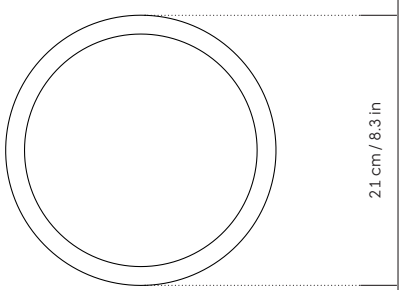

Front view

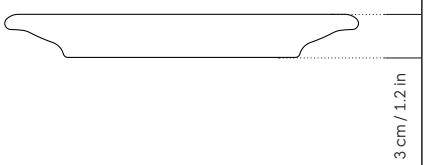

Bronto Bowl (Set of 2)

Design by Supergroup

Stocky, bulky and bold, Bronto tableware is a pleasing handful of ceramics. An ample mug and chunky espresso cup are immediately recognizable by their uncommonly fat handles. A side plate and bowl's rounded edges and nonchalant shapes follows suit. Even the smallest of the Bronto family, an eggcup, has serious chunk. As with all Supergroup designs, breezy forms belie technical expertise and, in fact, the exaggerated soft outlines of the Bronto range are a feat of ceramic production. A joyful color palette of high gloss glazes, plus a natural clay option, completes the Supergroup signature. Bronto is intended as your go to set for casual breakfasts, and zippy coffee breaks. The Bronto Bowl is deliciously glossy, deep and generous, featuring an exaggerated softly rounded edge for added Bronto-esque curvature.

Product name	Finish	SKU
Bronto Bowl	Pink	31005
	Orange	31006
	Green	31008
	Yellow	31007
	Brown	31537

Material
Ceramics
Glazed ceramics

Country of origin
Sri Lanka

Usage
Dishwasher safe
Food safe
Microwave safe

Always in stock
We keep all our products in stock and ready to ship from our warehouses in the US and EU

Pink
Glazed ceramics

Orange
Glazed ceramics

Green
Glazed ceramics

Yellow
Glazed ceramics

Brown
Glazed ceramics

Bronto Bowl

Top view

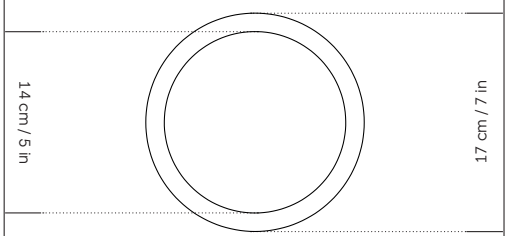

Front view

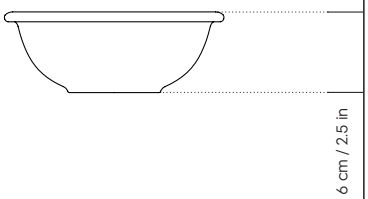

Bronto Egg Cup (Set of 2)

Design by Supergroup

Stocky, bulky and bold, Bronto tableware is a pleasing handful of ceramics. An ample mug and chunky espresso cup are immediately recognizable by their uncommonly fat handles. A side plate and bowl's rounded edges and nonchalant shapes follows suit. Even the smallest of the Bronto family, an eggcup, has serious chunk. As with all Supergroup designs, breezy forms belie technical expertise and, in fact, the exaggerated soft outlines of the Bronto range are a feat of ceramic production. A joyful color palette of high gloss glazes, plus a natural clay option, completes the Supergroup signature. Bronto is intended as your go to set for casual breakfasts, and zippy coffee breaks. Although the most petite item in the Bronto Family, our Eggcup has maximum appeal. Chunky, gutsy, bold and bright, we challenge you not to want it. Can also be used as a pinch pot.

Product name	Finish	SKU
Bronto Egg Cup	Pink	31012
	Orange	31009
	Green	31010
	Yellow	31011
	Brown	31536

Material
Ceramics
Glazed ceramics

Country of origin
Sri Lanka

Usage
Dishwasher safe
Food safe
Microwave safe

Always in stock
We keep all our products in stock and ready to ship from our warehouses in the US and EU

Pink
Glazed ceramics

Orange
Glazed ceramics

Green
Glazed ceramics

Yellow
Glazed ceramics

Brown
Glazed ceramics

Bronto Egg Cup

Top view

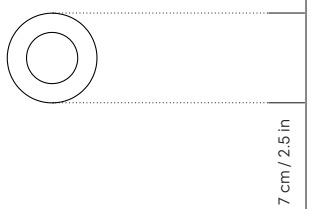

Front view

Fars Glas Drinking Glass (Set of 2)

Design by Erik Höglund

Fars Glas, which translates to “father’s glass” in Swedish, is a collaborative effortby Kosta Boda and Hem, reinvigorating an iconic archival design. Originally conceived in 1969 by the famous Swedish glassblower and designer Erik Höglund, this glass captivates with its abundant proportions, seamless simplicity, and unwavering durability. Crafted through mouth-blown techniques using lead-free glass, Fars Glas emerges as an enduring, indestructible design that embodies a harmonious blend of tradition and modernity, suitable for any occasion. Its robust nature ensures that this glass will withstand the test of time, for gatherings of generations to come.

Product name	Finish	SKU
Fars Glas (set of 2)	Clear	31371

Material
Glass
Lead free glass

Country of origin
Poland

Usage
Dishwasher safe
Food safe

Always in stock
We keep all our products in stock and ready to ship from our warehouses in the US and EU

Clear
Glass

Fars Glas

Top view

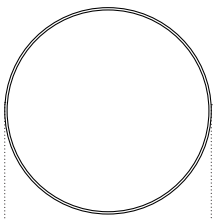

Front view

Volume 370 ml / 12.5 oz

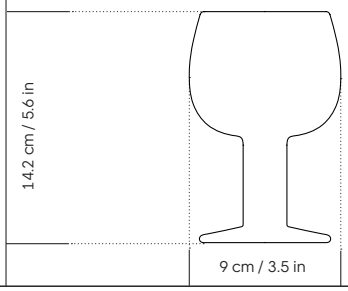

Molino Grinder

Design by Fabien Cappello

Think of the Molino Grinder as a functional sculpture for your tabletop. This super-sized utensil is efficient at granulating salt, pepper and spices, and its blown-up form is a graphic monument for your dinner table, too. Molino is a characteristically exuberant design from Fabien Cappello whose work reflects the energy and vivacity of Mexico, where he lives and works. The hand-painted, striped Molino grinders are made from turned solid beech wood and finished with high-gloss lacquer, while the solid beech Molino grinders are finished with a sheen lacquer to bring out the beauty of their natural properties.

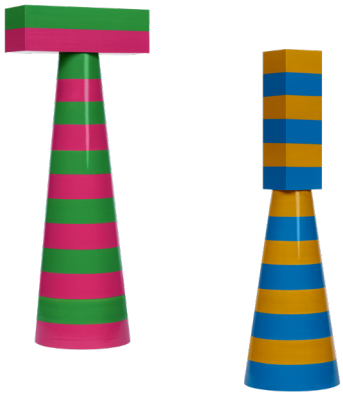

Product name	Finish	SKU
Molino Grinder Horizontal	Green / Yellow	30700
	Green / Magenta	30701
	Black / White	31059
	Beech Natural	31439
Molino Grind Vertical	Honey / Magenta	30698
	Honey / Blue	30699
	Black / White	31060
	Beech Natural	31440

Material
FSC wood

Hand-painted beech
Water based lacquer

Beech Natural
Acrylic lacquer

Grinder
Molino Grinder uses as high-quality ceramic grinding mechanism called CrushGrind®, making it highly flexible and capable of grinding salt, pepper, whole dried herbs and spices all with the same grinder

Country of origin
Poland

Always in stock
We keep all our products in stock and ready to ship from our warehouses in the US and EU

Honey / Magenta
Hand-painted beech

Honey / Blue
Hand-painted beech

Green / Yellow
Hand-painted beech

Green / Magenta
Hand-painted beech

Black / White
Hand-painted beech

Beech Natural
Solid Beech

MTO
Please refer to the price list or reach out to your local representative for our made-to-order options

Molino Grinder with vertical bar

Front view

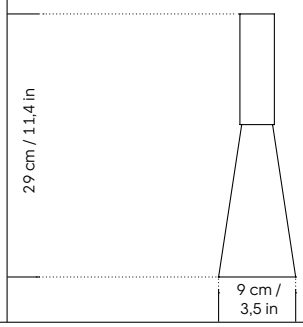

Molino Grinder with horizontal bar

Front view

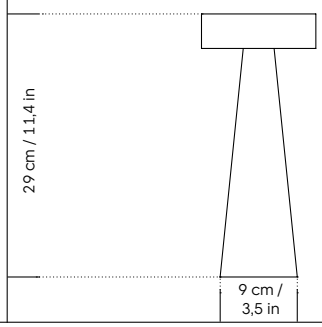

Care

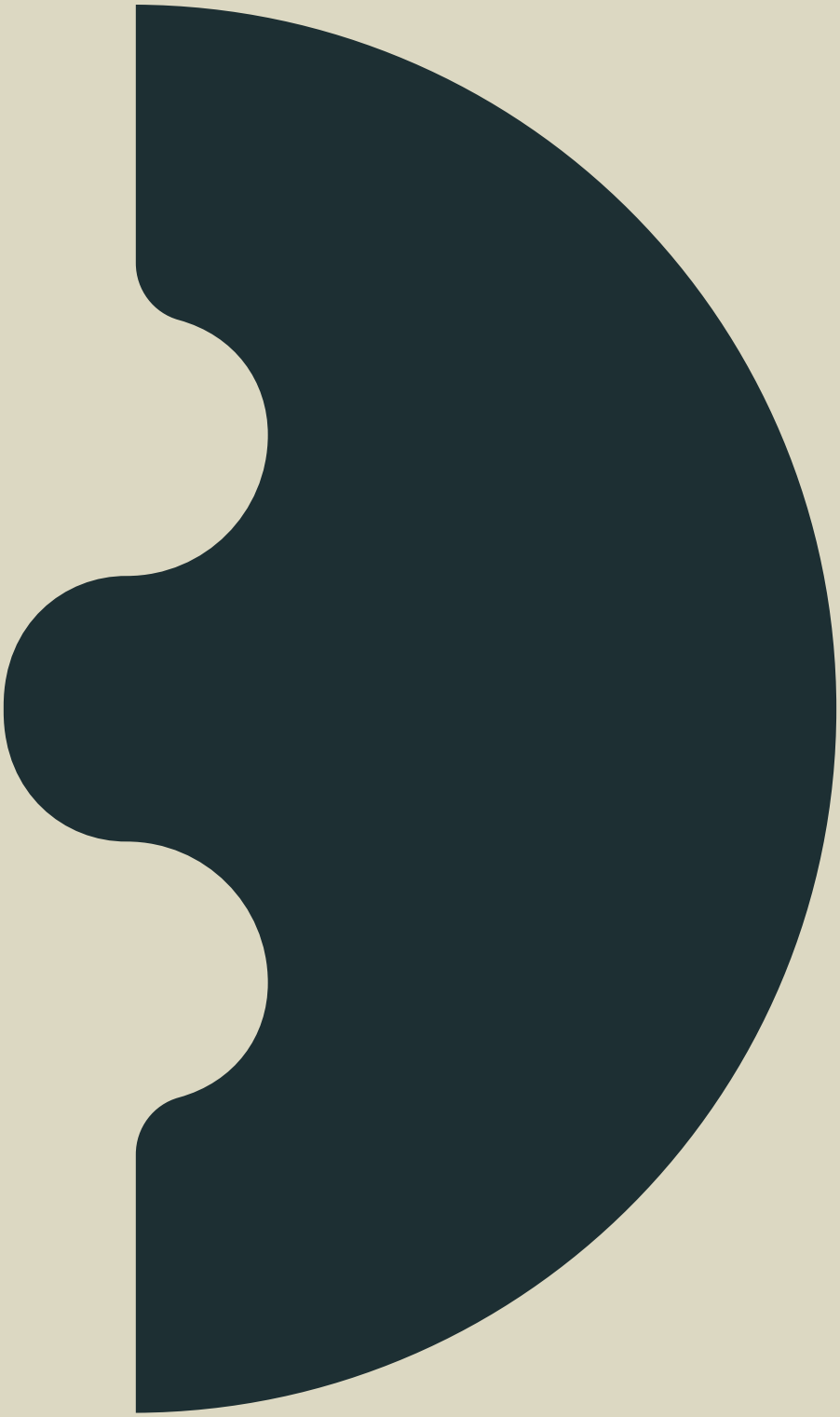

Instructions

General care and cleaning instructions

General cleaning
Using a solution of water mixed with a mild, environmentally friendly general detergent or washing up liquid, clean the surface with a soft, damp cloth. Always dry the surface after cleaning using a dry cloth. If the surface has a grain, always rub in the direction of the grain. If there is no directional grain, use a light, circular motion. Never use powdered abrasives or cleaning solutions that contain abrasives, or scotch pads / scouring pads as this may damage the surface.

Natural surfaces, timber, laminates and veneer

High pressure laminates / melamine surfaces

General cleaning
Using a solution of water mixed with a mild, environmentally friendly general detergent or washing up liquid, clean the surface with a soft, damp cloth. Always dry the surface after cleaning using a dry cloth. If the surface has a grain, always rub in the direction of the grain. If there is no directional grain, use a light, circular motion. Never use powdered abrasives or cleaning solutions that contain abrasives, or scotch pads / scouring pads as this may damage the surface.

Wood veneers & laminated wood

General care & cleaning
Using a solution of water mixed with a mild, environmentally friendly general detergent or washing up liquid, clean the surface with a soft, damp cloth. Wipe up any spills immediately to avoid stains. Take care not to soak the surface, and ensure the surface is well dried after cleaning before use. Placing objects on a wet surface can leave marks or rings. Never use powdered abrasives or cleaning solutions that contain abrasives, scotch pads/scouring pads or sandpaper as this may damage the surface. A veneered wood surface should be treated as any other wooden table. Always use a coaster under drinks to protect the surface, and never place any hot objects directly on the surface. Always leave an air gap if placed next to a radiator or heat source.

Light Exposure
For the first few weeks, objects should not be left on the table for too long as it may cause discoloration due to light exposure. After a few weeks the surface will settle. In general, uneven exposure to light should be avoided where possible, to ensure an even ageing of the wood material.

Solid wood—lacquered finish

General care & cleaning
Using a solution of water mixed with a mild, environmentally friendly general detergent or washing up liquid, clean the surface with a soft, damp cloth. Wipe up any spills immediately to avoid stains. Take care not to soak the surface, and ensure the surface is well dried after cleaning before use. Placing objects on a wet surface can leave marks or rings. Do not use abrasive pads or sandpaper on the wooden surface. Always use a coaster under drinks to protect the surface, and never place any hot objects directly on the surface. Always leave an air gap if placed next to a radiator or heat source.

Light Exposure
For the first few weeks, objects should not be left on the table for too long as it may cause discoloration due to light exposure. After a few weeks the surface will settle. In general, uneven exposure to light should be avoided where possible, to ensure an even ageing of the wood material. In case of significant damage to the surface finish, solid wood can be sanded down and re-lacquered. *This should only be undertaken by a professional.*

Solid wood—oiled or waxed finish

General care & cleaning
Using a solution of water mixed with a mild, environmentally friendly general detergent or washing up liquid, clean the surface with a soft, damp cloth. Wipe up any spills immediately to avoid stains. Take care not to soak the surface, and ensure the surface is well dried after cleaning before use. *Placing objects on a wet surface can leave marks or rings.* Do not use abrasive pads or sandpaper on the wooden surface. Always use a coaster under drinks to protect the surface, and never place any hot objects directly on the surface. Always leave an air gap if placed next to a radiator or heat source.

Light Exposure
For the first few weeks, objects should not be left on the table for too long as it may cause discoloration due to light exposure. After a few weeks the surface will settle. In general, uneven exposure to light should be avoided where possible, to ensure an even ageing of the wood material.

Re-application of Oil or Wax
Protective oil or wax should be re-applied as needed to maintain the woods' resistance to stains and spillages. Always use a high-quality, colorless, furniture-grade wood oil/wax, designed for the specific wood species of the product (Oak, Ash etc.). Availability of surface treatment products vary by region, so check with your local hardware store for advice on the best product to use. Clean the surface first as per the above instructions. Always apply any treatment in the direction of the grain, and wipe off any excess with a clean, dry cloth. Follow the instructions on the oil / wax product packaging for specific guidance on the application. If in doubt, consult a professional to refinish solid wood furniture. Hem will not be responsible for any issues that arise from refinishing of our products.

Metals

General cleaning
Always test a small area prior to cleaning. Wipe with a clean and dry or slightly damp cloth wrung out in a mild solution of environmental friendly detergent. Always dry with a clean and dry cloth after removing any residue. Keep the surface clean and dry. It may be stained permanently if any residue is not removed relatively quickly. Do not use any abrasive or chemical cleaning products, if not advised otherwise, as it can damage the surface.

Anodized aluminum
Always test a small area prior to cleaning. Wipe with a clean and dry or slightly damp cloth wrung out in a mild solution of environmental friendly detergent. Always dry with a clean and dry cloth after removing any residue. Keep the surface clean

and dry. It may be stained permanently if any residue is not removed relatively quickly. Do not use any abrasive or chemical cleaning products or solvents, if not advised otherwise, as it can damage the surface. Always dry with a clean and dry cloth after to remove any residue.

Chrome or polished metal
Always test a small area prior to cleaning. Wipe with a clean and dry or slightly damp cloth wrung out in a mild solution of environmental friendly detergent. Always dry with a clean and dry cloth after removing any residue. Keep the surface clean and dry. It may be stained permanently if any residueis not removed relatively quickly. Do not use any abrasive or chemical cleaning products, if not advised otherwise, as it can damage the surface. For everyday cleaning, wipe with a clean and dry or slightly damp cloth wrung in a glass cleaner. Always dry with a clean and dry cloth after to remove any residue.

Copper / brass
Always test a small area prior to cleaning. Wipe with a clean and dry or slightly damp cloth wrung out in a mild solution of environmental friendly detergent. Always dry with a clean and dry cloth after removing any residue. Keep the surface clean and dry. It may be stained permanently if any residue is not removed relatively quickly. Do not use any abrasive or chemical cleaning products, if not advised otherwise, as it can damage the surface. The copper and brass is untreated and will develop an elegant patina over time as it's handled or put in contact with liquids. Though the finish is intentionally left untreated they can be returned to their original polished state using a dedicated brass or copper polishing set.

Powder coated steel
Always test a small area prior to cleaning. Wipe with a clean and dry or slightly damp cloth wrung out in a mild solution of environmental friendly detergent. Always dry with a clean and dry cloth after removing any residue. Keep the surface clean and dry. It may be stained permanently if any residue is not removed relatively quickly. Do not use any abrasive or chemical cleaning products, if not advised otherwise, as it can damage the surface.

Stainless steel
Always test a small area prior to cleaning. Wipe with a clean and dry or slightly damp cloth wrung out in a mild solution of environmental friendly detergent. Always dry with a clean and dry cloth after removing any residue. Keep the surface clean and dry. It may be stained permanently if any residue is not removed relatively quickly. Do not use any abrasive or chemical cleaning products, if not advised otherwise, as it can damage the surface. Grease stains can be carefully removed using a cloth dabbed in glass cleaner. Always dry with a clean and dry cloth after to remove any residue.

Other materials

Cover fabrics & upholstery
Each fabric requires its own care and maintenance, please refer to the specific fabric for more details. Dust and dirt wear textiles down over time, so regular cleaning and maintenance is the best way to ensure the longest possible lifetime of your product. Vacuum the product frequently on a low to medium setting, preferably with an upholstery nozzle, and be careful not to rub the material with force as this potentially could damage the textile. Remove stains by patting the area gently

with a cloth wrung in lukewarm to hot water (preferably distilled), start from the outer rim of the spill and work toward the centre. If the stain is persistent we recommend using an environmentally friendly mild detergent, and then again patting the area down. To avoid any unforeseen damages, please try the detergent on a less visible area of the product. Finish off the stain removal by firstly repeating the process with clean water, to absorb any residue detergents, then take a dry cloth to dry up any remaining water. Please note these are only recommendations and we can never guarantee complete stain removal. We always recommend contacting a professional cleaning company for additional advice regarding your stain Upholstered furniture may be affected by exposure to direct sunlight or heat, consequently we recommend to avoid placing the products next to windows, radiators or fireplaces.

Glass
Glass should be wiped with a dry cloth. Clean the surface with a glass cleaner as needed. Never use abrasives or sharp objects to clean the glass.

Leather
Dust and dirt wear the leather down over time, so regular cleaning and maintenance is the best way to ensure the longest possible lifetime of your product. As the leather is semi-aniline, it will mark and patinate over time as it comes into contact with the natural oils from skin, and moisture.Vacuum the product with a soft brush frequently on a low to medium setting and be careful not to rub the material with force as this potentially could damage the leather. Alternatively use a dry cloth to remove any dust or dirt. If liquids are spilled on the leather, we recommend acting quickly and dabbing up as much as possible with a dry cloth or paper. Take care not to rub the surface, since this may spread the mark or push dirt into the pores of the leather. Leather furniture may be affected by exposure to direct sunlight or heat, consequently we recommend to avoid placing the products next to windows, radiators or fireplaces.

Plastics
Plastics should be wiped with a dry cloth. Dirt can usually be removed with a cloth and lukewarm water. If the stain persists, a mild detergent can be used to clean the surface. Always wipe off the surface with clean cloth and water, and then dry off any residue water. Don't use any abrasive tools, abrasive cleaning agents, strong chemicals or sharp objects as this may damage the surface. Colored plastic exposed to direct sunlight will over time start to fade due to the ultraviolet radiation. For this reason we recommend avoiding direct sunlight when possible.

Rugs
Dust and dirt wear the rugs down over time, so regular cleaning and maintenance is the best way to ensure the longest possible lifetime of your product. Shedding of loose fibers will occur with all new rugs. Use scissors to trim (do not pull) loose yarn to avoid unravelling. Vacuum the rug frequently on a low setting, never use hard roller brushes and be careful not to rub the material with force as this potentially could damage the rug. Clean stains directly as the spill occurs, dabbing the area with clean water. If the stain is persistent we recommend using an environmentally friendly mild detergent, and then again patting the area down. To avoid any unforeseen damages, please try the detergent on a not too visible area of the product. Finish off the stain removal by firstly repeating the process with clean water, to absorb any residue detergents, then take a dry cloth to dry up any remaining water. Please note these are only recommendations. We can never guarantee complete stain removal. We always recommend contacting a professional rug cleaning company for additional advice regarding your stain, and from time to time to have it dry-cleaned. Avoid direct and continuous

exposure to sunlight and rotate the rug periodically to promote even wear. A rug pad is recommended to extend the life of your rug further.

Stone materials
Clean your stone objects with a dry cloth. Dirt can usually be removed with a cloth and lukewarm water. If the stain persists, a mild detergent can be used to clean the surface. Always wipe off the surface with clean cloth and water, and then dry off any residue water. Don't use any abrasive tools, abrasive cleaning agents, strong chemicals or sharp objects as this may damage the surface. Stone is a porous material and liquids, such as coffee, tea and wine, or products with strong color agents, such as lipstick, can cause stains. To avoid this, make sure to wipe off any spills or stains directly with a damp cloth. To a small extent stone, like with all natural materials, may have natural marks on the surface which are indications of genuine stone.

Sustainability

Commitment

Making designs of obsessive quality includes a thoughtful approach to sustainability. At Hem, we work hard to reduce our environmental impact in every aspect of our work, recognising how our decision-making, on both the large and the small issues, has consequences. As a European design brand serving a global customer, we adhere to both local and international protocols, alongside which we have set out our own key objectives, which we explain on the following pages.

Enduring and Durable

It has always been Hem's guiding principle to design and make furniture that endures. You will often hear us repeat the motto; "designing and making pieces for the auction houses of tomorrow". In the simplest of terms; we want our objects to last, to transcend fashions, to remain desirable for generations, and in doing so they will remain in use and outside of the waste stream.

We achieve durability through a rigorous and lengthy design process and by consistently and stubbornly choosing high quality materials and manufacturing. It is not too much to say that we have a very exacting design and research process of which we are very proud. This translates to an extremely low "reject rate" during our manufacturing processes and an extremely low "claim rate" with our customers, meaning there is little waste generated during making and our objects rarely break or are returned. We also achieve longevity by designing systems of furniture that can grow with their owner, rather than be replaced. Did you know that we keep spare parts for our key designs in stock for years? Meaning that your Hem products can often be repaired and their usable life extended.

Most of our collection is certified to EU and American contract requirements and durability protocols, the highest standards for furniture manufacturing. You can access a full list of all the certifications we adhere to here:

Circularity

Although we hope all of our objects remain in use for generations, they will inevitably find themselves back in the circular economy at some point, so we address the end life of an object at the beginning of the design process. Currently, we use recyclable materials whenever possible and are working towards introducing more sustainable alternatives into our material palette. We have long refrained from using virgin plastics unless necessary in our designs and we use single materials where we can, meaning objects can be easily broken down for recycling.

Material Transparency

A thorough understanding of the materials we use is a key part of the Hem design process. You might have noticed that many of our products are singular in their materiality, thereby celebrating and revealing that material in the most direct way we can. We gather together all data about our materials and their sourcing for our customers to review; each Hem product is issued with an Ecology Sheet. See an example here:

We ensure all our materials are ethically grown, harvested, sourced, or made. We only use low-emitting materials and make sure that each is compliant with international standards. The majority of our wooden objects are made with FSC or PEFC timber and we can provide alternative documentation in the instances where they are not. Lastly, our dedication to responsible material usage is across the board; all of Hem's packaging is made from 100% recycled cardboard and we increasingly find utility in the material offcuts produced during our manufacturing, reducing waste wherever we can.

Manufacturing

Making furniture requires a lot of energy. We seek to minimize the energy we use wherever we can. We do this in a number of ways: Firstly, by partnering with responsible factories and makers – the majority of our collection is produced in Europe and as such our products strictly adhere to EU environmental standards and industry certifications, these are some of the most robust in the world. And when our products are made outside of the EU, we are just as stringent about good practice and efficient energy use. We even consider energy use whilst designing our products; minimizing the amount of processes needed and always choosing energy efficient methods of making.

Delivery & Supply Chain

Hem serves an international customer, with most of our sales being made online. Therefore, our delivery and supply chain are a pivotal part of our business. We endeavor to control and reduce the distance our products travel from multiple warehouses on different continents and insist our trucks and containers are always at least 90% full before they travel. We also limit unnecessary freight between production facilities by building this into our designs from the beginning, always producing a product at a single factory or workshop if we can. Doing so substantially reduces the hidden carbon footprint of the production process.

Instagram @hem
info@hem.com
www.hem.com

©Hem 2026